Product group 5 catalogue no. 102

"Pressure Balanced Design"

TAPER PLUG VALVES

KÄHLER ARMATUREN

Valves for petroleum derivatives, gases, chemicals and water

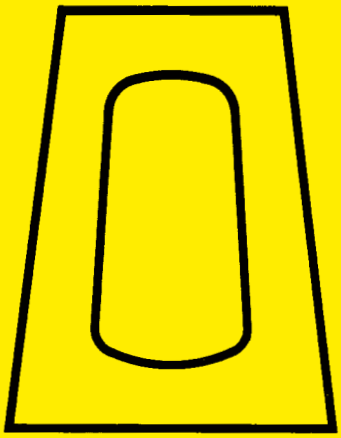

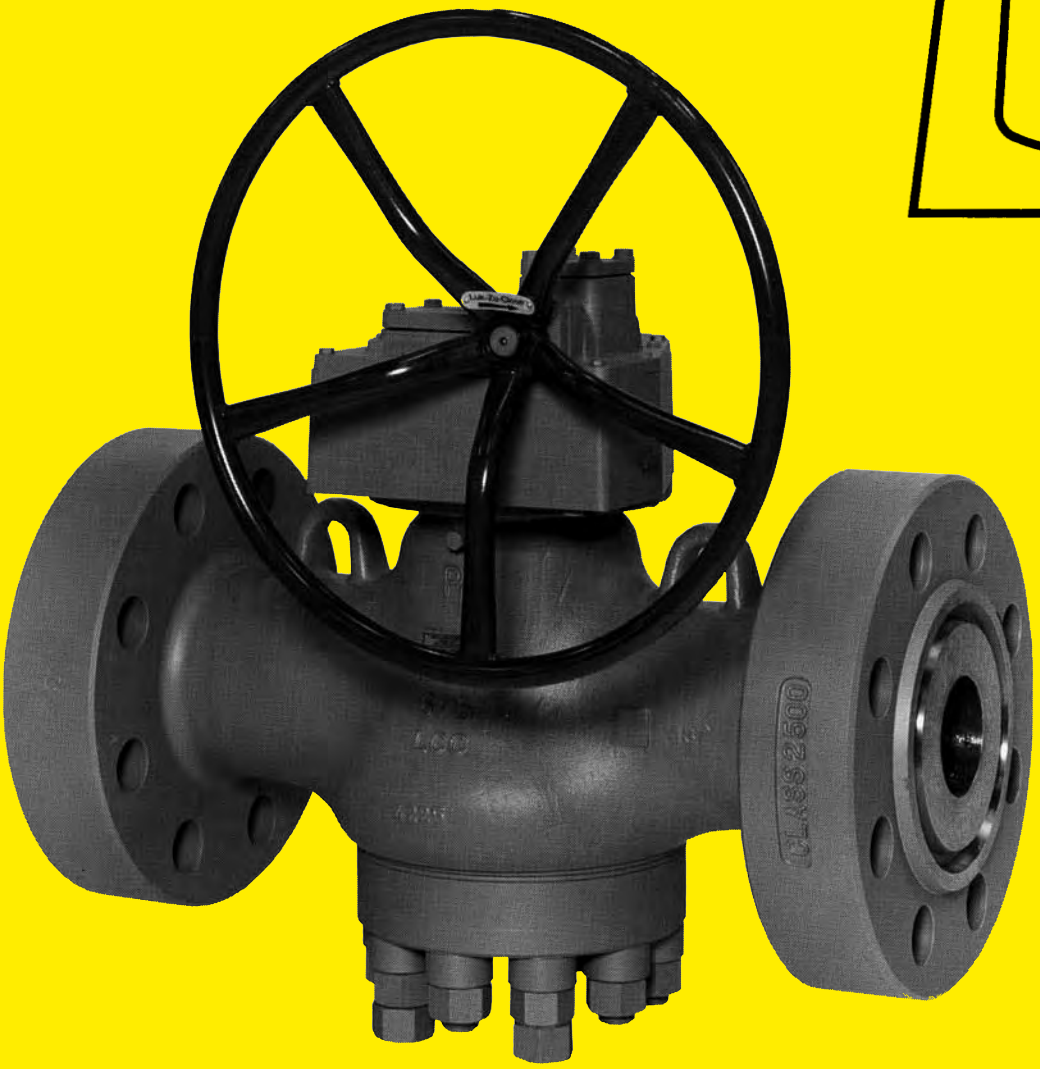

Sole-Distributors

The Factory in Skuderløse. Founded in 1942.

ISO 9001 CERTIFIED

This catalogue covers standard straightway in the Taper Plug design to the ANSI pressure class 150 - 300 - 600 - 900 - 1500 and 2500.
For information on valve types not covered by this catalogue, please contact our sole agent/representative in your country.

To identify the correct type of valve, please use the PR-figure number key on the following page, by means of which the valve figure number is specified in the shape of letters and digits.

When sending inquiries or orders to the supplier/representatives, it is important to state the exact details of the service (working conditions). Therefore, additional to the figure number, quantity and size, please state the following information:

Nature of service
Range of temperature
Normal working pressure
Type of flanges (raised face/ring joint or other)
Dimension of pipe (only when valves have butt or socket welding ends)
Accessories, if any.

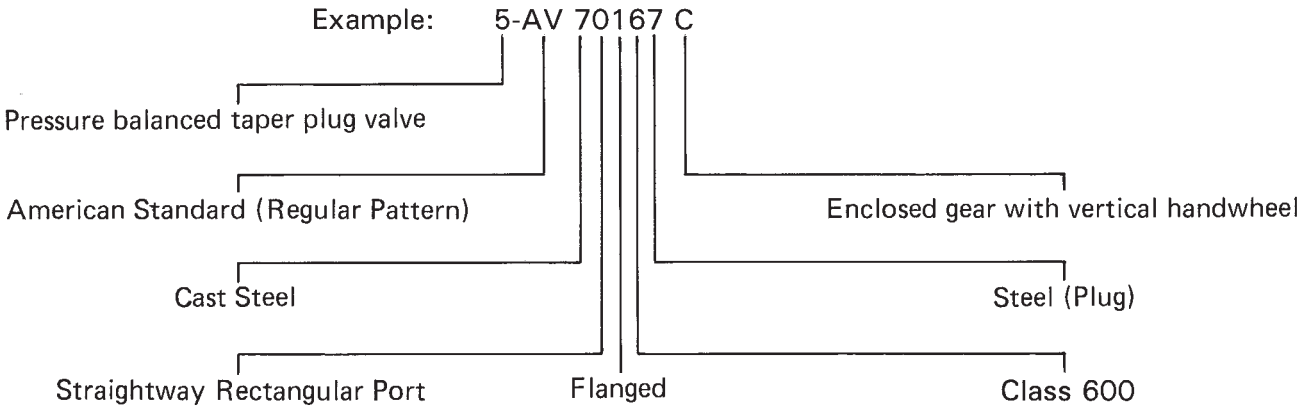

		Symbol:	1.	2.	3.	4.	5.	6.	7.	8.
Product-group	PR Valve (tapered plug) "Pressure Balanced Design"		5							
Standard	American (Venturi) API 6A			AE						
	American (Full bore, round port) API 6A			AF						
	American (Regular full bore Pattern)			AR						
	American (Regular Pattern)			AV						
	American (Venturi Pattern)			AT						
	American (Short Pattern)			AS						
Materials in Body	Ductile Iron				2					
	Cast Iron				4					
	Cast Steel				7					
	Stainless Steel				8					
	Special Alloy Steel (To order)				9					
Port	Straightway, rectangular					0				
	Straightway, round					1				
	Regulating Valve					2				
	Threeway, round L-port					4				
	Threeway, round T-port					5				
	Fourway, round straightway					6				
	Threeway, rectangular L-port					7				
	Threeway, rectangular T-port					8				
Ends	Screwed						0			
	Flanged						1			
	Clamps						4			
	Welding Ends						5			
	Socket Welding Ends						6			
Pressure Stage	Class 150	(PN 20)						2		
	Class 300	(PN 50)						4		
	Class 400	(PN 68)						5		
	Class 600	(PN 100) 2000 PSI API 6A						6		
	Class 900	(PN 150) 3000 PSI API 6A						7		
	Class 1500	(PN 250) 5000 PSI API 6A						8		
	Class 2500	(PN 420) 10000 PSI API 6A						9		
Materials in Plug	Ductile Iron								2	
	Cast Iron								4	
	Steel								7	
	Stainless Steel								8	
	Special Alloy Steel (To order)								9	
Methods of Operation	Wrenchoperated									N
	Enclosed gear unit, vertical handwheel									C
	Enclosed gear unit, horizontal handwheel									D
	Enclosed gear unit, horizontal stem with flange for multi-turn Actuator									CL
	Enclosed gear unit, vertical stem with flange for multi-turn Actuator									DL
	Pneumatic Actuator double acting									F
	Pneumatic single acting and spring return									FF
	Pneumatic Cylinder Unit									G
	Hydraulic Actuator double acting									J
	Hydraulic Actuator single acting by electrical power unit and spring return									JF
	Electric Linear Actuator									K
	Bare operating stem with flange for part-turn Actuator									L
	Elevated, enclosed gear unit, vertical handwheel									CHG
	Elevated, enclosed gear unit, horizontal handwheel									DHG

TAPER PLUG VALVES

Contents

Technical Information - Section A

	Page
List of Standard	A4
Valve Construction	A5
Pattern	A6
Operation	A7
Connection	A8
Lubrication	A9
Sealing Compound Recommendations	A10
Materials of Construction and Colour Code	A11
Pressure Test / Inspection	A12
Wrenches	A15
Lubricant Accessories	A16

Valve Identification - Section B

	Page
Class 150 Short Flanges	B13
Class 150 Short Welding Ends	B14
Class 150 Regular Full bore Screwed	B15
Class 150 Regular Full bore Flanges	B16
Class 150 Regular Full bore Welding Ends	B17
Class 150 Regular Screwed	B18
Class 150 Regular Flanges	B19
Class 150 Regular Welding Ends	B20
Class 150 Venturi Flanges	B21
Class 150 Venturi Welding Ends	B22
Class 300 Short Flanges	B23
Class 300 Short Welding Ends	B24
Class 300 Regular Full bore Screwed	B25
Class 300 Regular Full bore Flanges	B26
Class 300 Regular Full bore Welding Ends	B27
Class 300 Regular Screwed	B28
Class 300 Regular Flanges	B29
Class 300 Regular Welding Ends	B30
Class 300 Venturi Flanges	B31
Class 300 Venturi Welding Ends	B32
Class 600 Regular Full bore Screwed	B33
Class 600 Regular Full bore Flanges	B34
Class 600 Regular Full bore Welding Ends	B35
Class 600 Regular Flanges	B36
Class 600 Regular Welding Ends	B37
Class 600 Venturi Flanges	B38
Class 600 Venturi Welding Ends	B39
Class 900 Regular Full bore Screwed	B40
Class 900 Regular Full bore Flanges	B41
Class 900 Regular Full bore Welding Ends	B42
Class 900 Regular Flanges	B43
Class 900 Regular Welding Ends	B44
Class 900 Venturi Flanges	B45
Class 900 Venturi Welding Ends	B46
Class 1500 Regular Full bore Screwed	B47
Class 1500 Regular Full bore Flanges	B48
Class 1500 Regular Full bore Welding Ends	B49
Class 1500 Regular Flanges	B50
Class 1500 Regular Welding Ends	B51
Class 1500 Venturi Flanges	B52
Class 1500 Venturi Welding Ends	B53
Class 2500 Regular Full bore Screwed	B54
Class 2500 Regular Full bore Flanges	B55
Class 2500 Regular Full bore Welding Ends	B56
Class 2500 Regular Flanges	B57
Class 2500 Regular Welding Ends	B58
Class 2500 Venturi Flanges	B59
Class 2500 Venturi Welding Ends	B60

Tables - Section F

	Page
Inch to millimetre	F1
Decimal and millimetre equivalents	F2
Decimal equivalents	F3
Kilogram in pounds	F3
Pounds in kilogram	F3
Temperature conversion	F4
Pressure conversion	F5
Pressure/Temperature ratings for carbon steel valves	F6
Flange dimensions class 125 and class 150	F7
Flange dimensions class 250 and class 300	F8
Flange dimensions class 400 and class 600	F9
Flange dimensions class 900 and class 1500	F10
Flange dimensions class 2500	F11
Flange dimensions class 150 Ring Joint	F12
Flange dimensions class 300 Ring Joint	F13
Flange dimensions class 400 Ring Joint	F14
Flange dimensions class 600 Ring Joint	F15
Flange dimensions class 900 Ring Joint	F16
Flange dimensions class 1500 Ring Joint	F17
Flange dimensions class 2500 Ring Joint	F18
Socket Welding Ends dimensions	F19

The Standards printed in bold print is to be considered as the main standard (specification). The below standards in thin print originate from the main standard. Each main standard has its own reference.
The list of standard practice is only intended as a guide.

List of Standard Practice	
BS 5353	**Specification for steel plug valves**
BS 1560	Circular Flange for Pipes, Valves and Fittings (Class designated)
BS 4504	Circular Flange for Pipes, Valves and Fittings (PN designated)
BS 21	Pipe Threads
BS 2080	Face-to-Face, Centre-to-Face, End-to-End and Centre-to-End dimensions of valves
BS 6755	Testing of Valve Part 1 Specification for production pressure testing requirements.
ASME B 16.34	**Valves – Flanged, Threaded and Welding Ends**
ASME B 16.5	Pipe Flanges and Flanged Fittings
ASME B 16.11	Forged Fittings, Socket-Welding and Threaded Ends
ASME B 16.25	Buttwelding Ends
ASME B 1.20.1	Pipe Threads, General Purpose (Inch)
ASME B 16.10	Face-to-Face and End-to-End Dimensions of Valves
API 6D	**Specification for Pipeline Valves (Gate, Plug, Ball and Check Valves)**
ASME B 16.5	Pipe Flanges and Flanged Fittings
ASME B 31.4	Liquid Petroleum Transportation Piping Systems
ASME B 31.8	Gas Transmission and Distribution Piping Systems
API 599	**Metal Plug Valves – Flanged and Welding Ends**
API 598	Valve Inspection and Test.
ASME B 16.5	Pipe Flanges and Flanged Fittings.
ASME B 16.25	Buttwelding Ends
ASME B 16.10	Face-to-Face and End-to-End Dimensions of Valves.
ASME B 16.34	Valves – Flanged, Threaded and Welding Ends.
API 6A	**Specification for Wellhead and Christmas Tree Equipment.**
Quality management systems	**Design and manufacture of valves for liquid and gaseous applications on onshore and offshore installation in acc. to Pressure Equipment, Directive 97/23/EC** **Design and manufacture of vlaves and associated pipe fittings ISO 9001** **American Petroleum institute 6A** **American Petroleum institute 6D**
NACE MR01-75	Standard Material Requirements Sulfide Stress Cracking Resistant – Metallic. Materials for Oilfield Equipment. The NACE MR01-75 standard can be connected to every main standard (printed with bold) provided that the choise of material is acceptable to the NACE MR01-75 standard
API 607	Fire Test for Soft-Seated Ball Valves.
API 6FA	Specification for Fire Test for Valves.
BS 6755	Testing of Valves Part 2 Specification for fire type-testing requirements.
ISO 10497	Testing of Valves – Fire Type – testing requirements. These Fire Test standards can be connected to every main standard.

API = American Petroleum Institute.
ASME = The American Society of Mechanical Engineers.
BS = British Standard
NACE = National Association of Corrosion Engineers.
ISO = The International Organization for Standardization

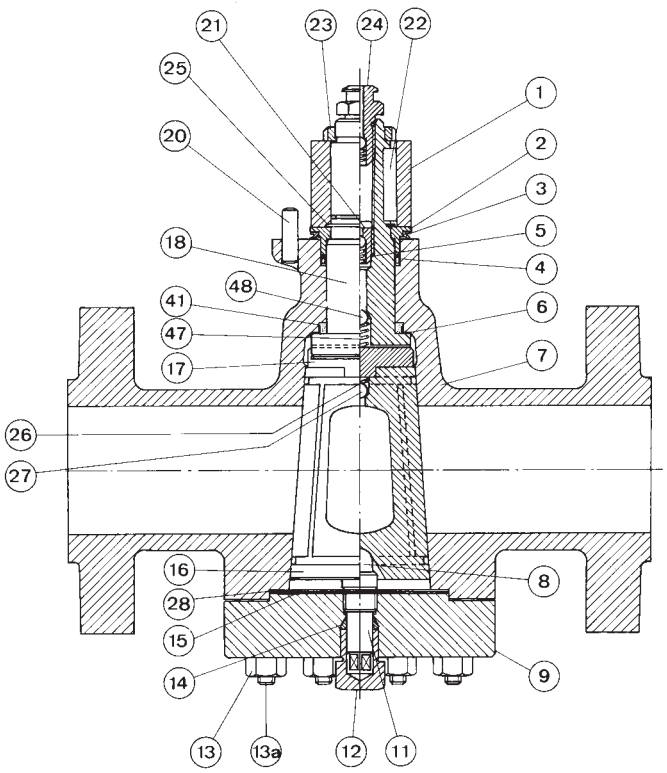

1. Operating square
2. Stem bearing
3. V-Ring
4. Sealing Ring
5. Gasket
6. Thrust Plate
7. Body
8. Ball Seat
9. Bottom Cover
11. Pressure Screw
12. Bottom Screw
13. Nuts
13a. Stud
14. Retaining Ring
15. Diaphragm
16. Plug
17. Equalizer Ring
18. Operating Stem
20. Stop
21. Check Valve
22. Parallel Key
23. Nut for stem
24. Lubricant Screw
25. Snap Ring
26. Spring
27. Ball
28. Diaphragm
41. Fireseal
47. Spring
48. Ball

The PR lubricated taper plug valve group 5 is the ideal shut off device for almost any medium, even under the most severe operating conditions.
It can be used in most places where fast, trouble-free and efficient sealing is required. The design is very compact, it requires little space to install and can be mounted in any position required. Since the only moving parts are the plug and the stem, the basic operation of the PR valve is very simple. When the plug is turned 90°, the valve moves from closed to open position - and vice versa.

The plug is tapered 1:6 and is individually fitted to the valve body with very close tolerances. It incorporates Metal to Metal sealing, which means that no soft seal will be damaged by the flowing medium.
As a secondary seal, the valve is provided with a lubrication system which allows feeding a special lubricant into the valve while the valve is in operation.
Besides sealing, the purpose of the lubricant is to protect the internals of the valve against corrosion and wear as well as reducing the valve torque.

The valve is manufactured in the "Pressure Balanced Design", this means that the plug is provided with pressure balance holes which ensure that the plug is always in axial balance and consequently prevents the plug from taper locking. Furthermore, in order to reduce the valve torque, the surface of the (tapered) plug is coated with P.T.F.E.
The plug and the operating stem are two separate parts which are connected by means of an equalizer ring acting as universal joint. The stem is Blowout-proof. This means the only way to remove it is from the bottom after valve is disassembled.

With three independent seals the sealing of the PR valve is unique. This is made up of a reinforced P.T.F.E. thrust plate (6) followed by a 100% pure graphite seal with a stainless steel back-up ring (41).
The graphite seal is very efficient at extremely high temperatures and meets the most strict demands of several different standards relative to fire safe design.

At the top of the stem, the primary seal is placed (4). This sealing ring is a P.T.F.E. (teflon) sealing ring with an embedded spring of Hasteloy C. The ring can be replaced from the outside. The sealing ring is kept in place by the stem bearing (2) and the snap ring/ locking ring (25).

In addition to the stemseals mentioned, the wrench operated valve has a weatherproof seal (3) to prevent penetration of water and dirt into the stem.

The bottom cover (9) is bolted on the valve body with the studs (13a) and the nuts (13). Two flexible plates or diaphragms (15) + 28) are placed in a recess between the valve body and the bottom cover. They function as a metal seal between the valve body and the bottom cover and also prevent the medium from leaking at the adjustment arrangement consisting of the pressure screw (11), the retaining ring (14) and the bottom screw (12).
The plug is adjusted within the valve body by means of the pressure screw (11) and is kept in place by the retaining ring (14) when the bottom screw (12) is tightened. All adjustments to the plug are accomplished by a "flexing" of the two diaphragms.

As mentioned, the valve is provided with a lubrication system which allows penetration of special lubricant into the valve through lubricant screws (24) and check valves (21 + 48).
The lubricant is injected into a network of grooves by means of a special high pressure lubricant gun. This network system ensures that all seal faces are supplied with a thin coat of lubricant and by so doing becomes an efficient secondary seal.

The PR valves can be supplied as wrench operated or gear operated valves.
Moreover the valves can be supplied with top-flange and stem for mounting of any kind of actuator.
If the valve is supplied with such a top flange, the lubrication injection system is moved from the stem to the side of the valve body.

PR valves are available in a wide range of variants as described in the valve standards.
In API 6D, API 599 and BS 5353, the variants are defined as Short Pattern, Regular Pattern, Venturi Pattern and Full Bore Pattern, respectively.
The different variants refer to face to face dimension, plug port and shape.

Venturi Pattern
These valves have face-to-face dimensions in accordance with the appropriate British and American standards where applicable, in order to ensure the maximum interchangeability between different valves.

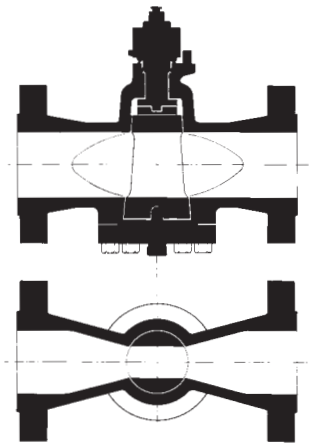

The plug ports of these valves are of reduced area, but the change of section through the body throat is so designed as to produce a Venturi effect to restore a large percentage of the velocity head losses through the valve, thus resulting in a relatively low pressure drop. These valves are ideally suited for all normal pipeline applications, particularly in the larger sizes where there is a considerable saving in cost.

Regular Full Bore Pattern.
These valves have face-to-face dimensions in accordance with the appropriate British and American standards where applicable. This ensures the maximum interchangeability between valves of different types and end connections.

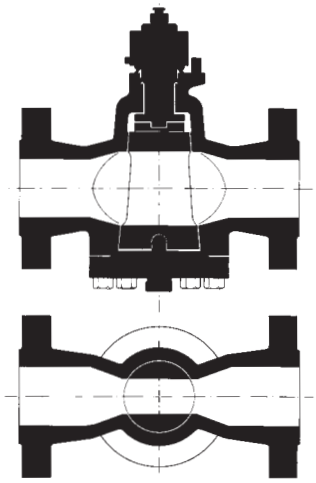

The plug ports of these valves are approximately rectangular in section and have an area corresponding to the round end connection of the valve, furthermore they have an extremely low pressure drop. The transition from the round body end ports to the rectangular seat ports is smooth, and entails no sudden alterations in shape or section which might cause excessive changes in velocity or direction of the fluid flowing in the pipeline.

Short Pattern
These valves have the same face-to-face dimension as gate valves according to ANSI B 16.10 in class 125, 150, 250 and 300.
In order to obtain the relatively short face-to-face dimension, the plug port is reduced and has a rectangular slightly tapered-shape.

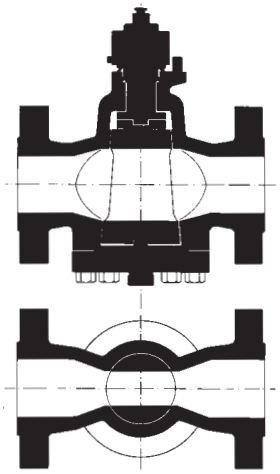

Regular Pattern
These valves have face-to-face dimensions in accordance with the appropriate British and American standards where applicable. This ensures the maximum interchangeability between valves of different types and end connections. The plug ports of these valves have a rectangular - slightly tapered shape in section and have an area larger than Venturi Pattern. The transition from the round body end ports to the rectangular seat ports is smooth, and entails no sudden alterations in shape or section which might cause excessive changes in velocity or direction of the fluid flowing in the pipeline.

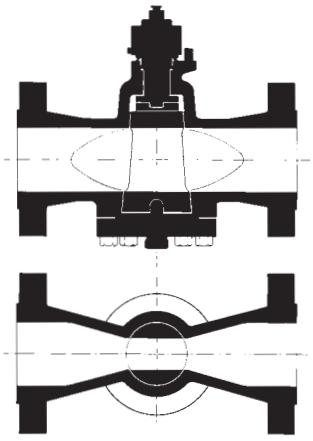

Regular Round Full Bore Pattern
These have circular ports, the diameter of which, unless otherwise stated, is equal to, or greater than, the inside diameter of the corresponding pipe. The valves are intended for use when it is necessary to pass a scraper or other tool through the valve body, or for other special applications.

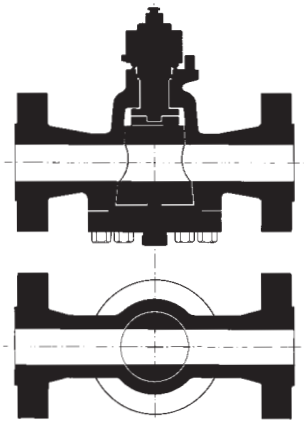

The face-to-face dimension are greater than for the corresponding Regular Pattern valve but comply with British and American Standards where applicable. This type valve is particularly suited for raw sludge application in sewage treatment plants, hot taps for pipe line etc.

The simplest method of operating the PR valve is by using a wrench directly on top of the valve plug.

Straight-way valves open and close by rotating through 90° while three-way valves have rotary motions through 90° - 180° - 270° - 360°.

The wrench can be fitted on the square of the valve plug in eight different positions. This is a big advantage in places with limited space.

The wrench is available in a short and a long version as type 8K and type 8L.

Wrench operation is used on relatively small valve sizes, as indicated on the dimension sheets.

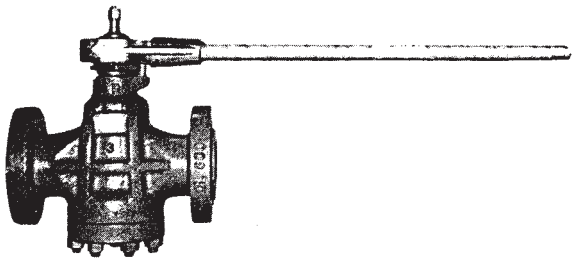

Gear, type C, is enclosed in a water—proof casing, with the hand-wheel located vertically on side of the valve.
Worm and worm wheel are embedded in heavy bronze bearings, and the axial load stress is absorbed by ball bearings.
Both bearings and tooth racks are lubricated with concentrated molybdenum grease to resist high temperatures. (See lubrication of gear, page A9).
The gear has fixed stops at extreme position, plus position indicator.

Gear, type C, is available in all pressure classes and valve sizes.

Type C can be fitted with electric, pneumatic or hydraulic actuator.

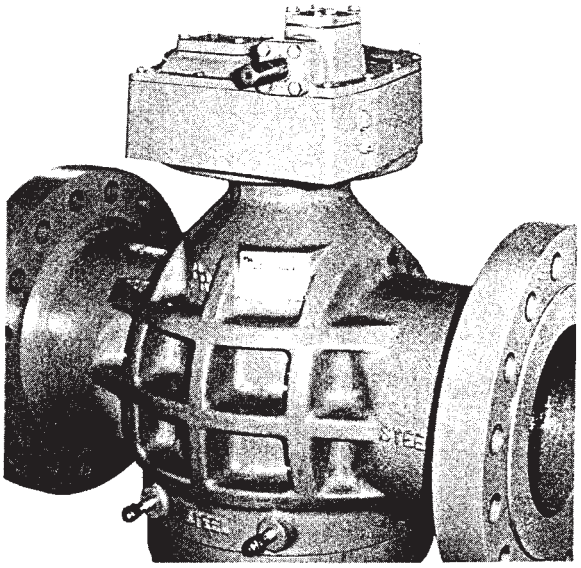

Gear, type D, is enclosed in a water—proof casing, with the hand-wheel located horizontally on top of the valve.
Worm and worm wheel are embedded in heavy bronze bearings, and the axial load stress is absorbed by ball bearings.
Both bearings and tooth racks are lubricated with concentrated molybdenum grease to resist high temperatures. (See lubrication of gear, page A9).

The gear has fixed stops at extreme positions, plus position indicator.

Gear, type D, is available in all pressure classes. (For valve sizes — see dimension sheets).

Gear, type D, can be fitted with electric, pneumatic or hydraulic actuator.

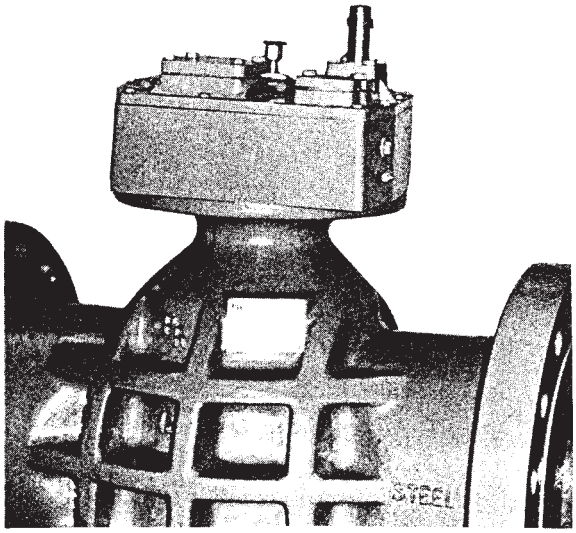

Screwed Ends:

Designed in accordance with API Line Pipe threads (Taper) API Std. 5B Table 2.1 or ANSI Std. B1.20.1.
Available in size 1/2" to 4".

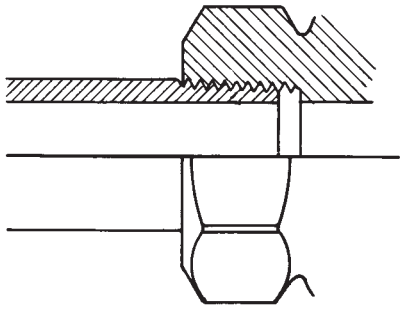

Flanges:

Designed in accordance with the ANSI standard, as indicated on the dimension sheets.
Unless otherwise specified, all flanges are supplied with Raised Face.
The surface of the raised face is in accordance with the MSS SP-6 standard.

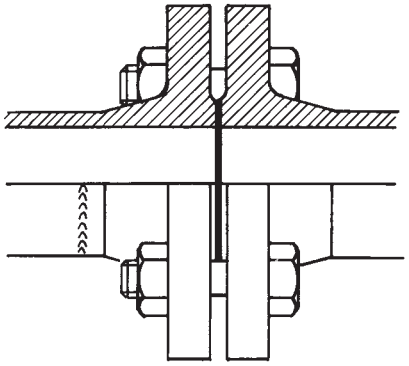

Butt Welding Ends:

For direct welding in the pipeline.
Designed in accordance with ANSI B 16.25.

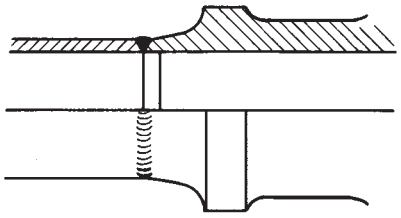

Socket-Welding Ends:

For direct welding in the pipeline.
Designed in accordance with ANSI B 16.11.
Dimension, page F19.
Available in sizes 1/2" to 4".

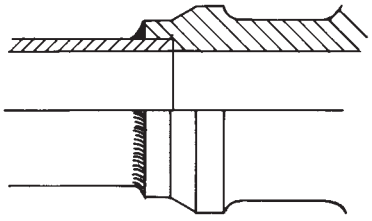

Other types of connections such as ring joint, clamps, connections from a specific manufacturer, etc., can also be delivered. (For instance graylock, spolock, destec etc).

The PR valve is grease packed, i.e. the plug rests on a lubricating film in the valve body.
The lubricant has three functions: to protect the internal closing surfaces of the valve from corrosion, to grease seal the valve, and to contribute to easy handling. With an eye to achieving the best possible action, it is therefore important to relubricate the valve. The number of relubrication will depend on the operating conditions and the demands made on sealing.
Thus a valve operating at high temperature is to be lubricated more frequently than a valve operating at low temperature. If frequently handled, the valve is to be lubricated more often, too, to obtain a good sealing.

As the lubricant dries up faster at rising temperatures, the below time intervals indicate when relubrication should take place.

Temp. between	up to 90°C up to 200°F	90 to 120°C 200 to 250°F	120 to 150°C 250 to 300°F	150 to 180°C 300 to 350°F	180 to 200°C 350 to 400°F
Time interval	24 mo.	12 - 18 mo.	8 - 12 mo.	4 - 8 mo.	2 - 4 mo.

There is PR Lubricant for each flow medium (see lubrication chart).
It is therefore important to relubricate the valve with the proper type. If the valve is ordered specifically for a given medium, then the type of lubricant is stamped on the hexagonal head of the lubricating nipple.
Use only original PR Lubricant.

Fig.1

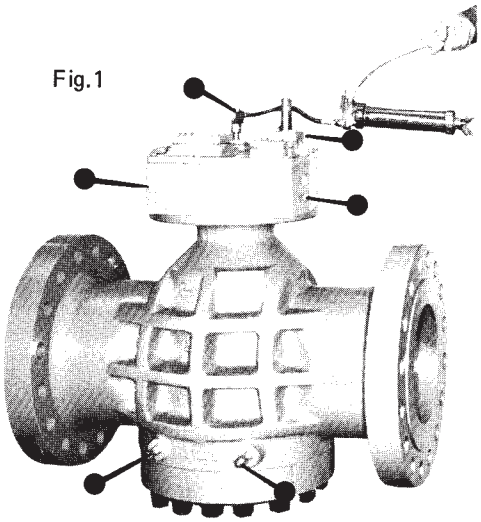

Lubrication: ●

Lubricant gun (Manual or automatic).The best and fastest results is achieved by using a PR Lubricant Gun (see fig. 1). The lubricating nipple (push on connection) on the lubricant gun is fastened directly to the lubricating nipple.

Gear Lubrication: ●

Gear lubrication follows the "principle of dry lubrication", i.e. to the teeth and worms a layer of antiseizing compound is applied, while the gear bearings are lubricated through lubricating nipples by applying.
The gear is lubricated at the factory and normally needs no lubrication.

Fig.2

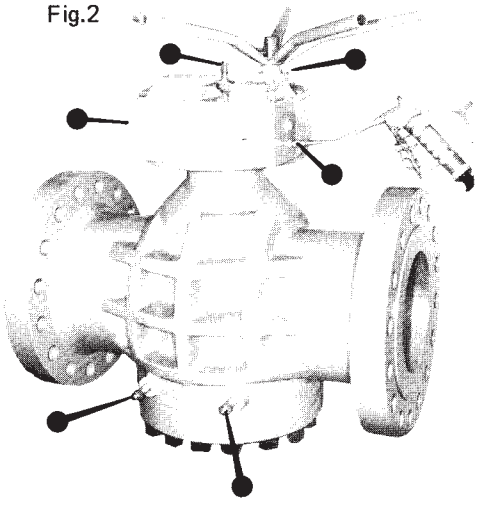

Relubrication of gear:

The gear bearings are lubricated through grease nipples. (See fig. 2)
The gear tooth racks on worms and worm wheels are, as a rule, never relubricated. However, in case of trouble of control, making handling difficult, a penetrating and almost screaming sound wil indicate a lack of lubrication. In such cases, a relubrica- tion of the tooth racks is necessary.
For gear type C or D, a removal of the gear cover is necessary to make the gear parts accessible. The lubricating paste is then applied to all tooth racks of both worms and worm wheels in a layer of about 1 millimetre (1/32"). Use a little filling spatula for application.
Recommended for use by the factory are:
For bearings, worms and gears:
BCH G10.

Standard Lubricants - mainly to be used.

Lubricant no. PR	Colour of compound	Temperature Range C	Temperature Range F	RECOMMENDATIONS
80	Black	- 10 + 180	+ 14 + 356	**Cold and hot water** up to 180°C, conditional up to 200°C. Cold and hot air. 50% lye up to 50°C conditional up to 100°C, 50% acids up to 50°C, inorganic saline solutions up to 100°C, steam conditional up to 200°C. Suitable for town gas, propane, butane and natural gas. Not suitable for gas condensate.
711	Black	- 10 + 225	+ 14 + 437	**Petroleum products.** Butane and propane (max. 100°C). Gasoline, kerosene, asphalt and bitumen, oils and most hydrocarbon solvents. Also suitable for gases (max. 170°C). Cold and hot air. Not suitable for hot water, strong alkalis and aromatic solvents.

Special Lubricants - normally to be used only where the standard lubricants cannot be used.

Lubricant no. PR	Colour of compound	Temperature Range C	Temperature Range F	RECOMMENDATIONS
40	Clear	- 10 + 100	+ 14 + 212	Cold and warm water. General Aqueous Solutions. Alcohols.
45	Yellowish-beige clear	- 10 + 130	+ 14 + 266	For water at max. 100°C, drinking-water, beer, mine- ral water, milk, cocoa, cream, ammonia compound, acids and alkali desinfecant, fruit-acid and alcohol.
60	White	- 30 + 250	- 22 + 482	All diluted and concentrated acids and lyes, fluorine, chlorine, bromine, iodine, phosphorus oxychloride, ozone, hydrogen peroxide, all organic solvents (except hydrogen fluorcide), all mineral, vegetable and animal oils and fats. Do not affect elastomers and plastics.
103	Green	- 30 + 200	- 22 + 392	General purpose synthetic sealant for liquid and gaseous aliphatic hydrocarbon service suitable for gasoline, kerosene, fuel oils, crude distillates, aviation and jet fuel, natural gas. Not suitable for steam, aromatic solvents, strong acids and alkalies.
280	Black	- 10 + 200	+ 14 + 392	Cold and hot air up to 200°C. Cold and hot water up to 180°C. Cold and hot gases up to 150°C. Not suitable for strong acids, petroleum products and aromatic and chlorinated solvents.
* 330	White	- 30 + 250	- 22 + 482	Hot water and gases. Natural gas, propane, butane, asphalt and bitumen. General chemical aqueous solutions eg. alkalis and dilute acids. It is useful for hot air. Not suitable for light liquid hydrocarbons, aromatic and chlorinated solvents and strong mineral acids.

* This type of lubricant ought to be avoided, if one of the other types can be used, as this contain silicone oil. The operating torque of the valve will increase considerably.
For exceptional working conditions and services not mentioned in the table, please ask for further information.

CAST IRON
ASTM A 126 Class B (High strength grey iron).
Tensile Strength: min. 31000 PSI (214 N/mm^2).
Cast Iron material is very economical and suitable for most common service conditions such as air, water, gas and oil at medium pressures and temperatures. It possesses good resistance to corrosion in most organic solutions, alkalies and many acids of higher concentrations at normal temperatures. Plugs are anti-friction treated with P.T.F.E.

DUCTILE IRON (Cast Iron with spheroidal Graphite).
ASTM A 536 Gr. 60-40-18.
Tensile Strength: min. 60000 PSI (414 N/mm^2).
This material is especially used where cast iron does not fulfil the requirements and where cast steel is too expensive.
Plugs are anti-friction treated with P.T.F.E.

CARBON STEEL
ASTM A 216 Grade WCB.
Tensile Strength: min. 70000 PSI (485 N/mm^2).
The valves of cast steel are made in accordance with the specification of the mentioned ASTM standard.
To counteract seizing steel plugs have a thin coat 20 µm of electroless nickel, and then anti-friction treated with P.T.F.E.
Carbon steel is suited for valves in cold or hot water services without corrosive impurities. It is also suitable for oil, gas, air and, other line fluids where valves are required of high strength, toughness and stability against vibration, blows and fire, except for extremely high or low temperatures which require steel alloys.
Our valves are also available to NACE Standard MR-01-75. Hardness level of Rc 22 or lower.

LEAD-BRONZE 80/10/10
CuPb10Sn10. ISO 1338 - ASTM B30 937.
Tensile Strength: min. 12500 PSI (180 N/mm^2).
Brinell Hardness: 65
Chemical Properties: Resistant to actions of ordinary services.
Physical Properties: Good pressure tightness and resistant to wear.
Other alloys, fx. 90/10 or 88/10/2,0 are delivered on inquiry.

STAINLESS ACID-RESISTING STEEL
Rust and acid resisting.

Chromium	Nickel	Molybdenum
Cr 18% to 21%	9 to 12%	2 to 3%

ASTM A 351 Grade CF8M or AISI 316.
Tensile Strength: min. 70000 PSI (485 N/mm^2).
To counteract seizing plugs in stainless steel have a thin coat 20 µm of electroless nickel, and then anti-friction treated with P.T.F.E.

AUSTENITIC - FERRITIC STEEL. (Duplex stainless steel)
ASTM A 890 4A,

Chromium	Nickel	Molybdenum	Nitrogen
Cr 22%	Ni 5%	Mo 2,5%	N 0.1%

Tensile strength: min. 620 N/mm^2.
The materials A 890 4A are austenitic-ferritic acid-resistant steel with very high mechanical properties. Moreover they are extremely, resistant to corrosion.
The materials A 890 4A are very resistant to stress - (SCC) and pitting corrosion in environments containing cloride. The resistance to stress corrosion (SCC) caused by hydrogen sulphide in environments containing cloride is also excellent.
The materials A 890 A4 meet the demands usually requiring high alloyed nickel qualities. As the content of cromium and nickel is fairly low these materials will proove an economically good alternative to more expensive high alloyed qualities.
To counteract seizing plugs in stainless steel have a thin coat 20 µm of electroless nickel, and then anti-friction treated with P.T.F.E.

SPECIAL QUALITIES AND ALLOYS: Tests which exceed the requirements of the respective standards can be carried out on the above mentioned materials if required.
Special alloys are manufactured on request.

COLOUR CODE
To facilitate identification the valves are normally painted as follows:

Cast Iron : Green	Steel : Blue	Stainless Steel : Silver grey
Ductile : Dark grey Bronze	: Unpainted	Duplex : Light grey

After assembling, before delivery, all Christensen Plug Valves pass through a careful pressure test.
The test is carried out acc. to the following standards: ASME B 16.34, BS 1560, BS 6755 API 598 and ASME B16.1.
If the customer or his representative wants to participate at the test - or, if there are special requirements to the pressure testing, this must be arranged with the manufacturer and stipulated in the purchase order.

Material	ASME B 16.1		Class (1/2" to 12")					Class (14" to 36")	
			125	250				125	250
Semi Steel ASTM A126 Class B	Maximum Cold Working Pressure	PSI	200	500				150	300
		BAR	13,8	34,5				11	21
	Hydrostatic Shell Test	PSI	300	750				230	450
		BAR	20,7	51,8				16	30
	Seat Test	Min. PSI	220	550				165	
		Min. BAR	15,2	37,9				12	

Material			Class						
			150	300	400	600	900	1500	2500
Carbon Steel ASTM A216 Gr. WCB	Maximum Cold Working Pressure	PSI	285	740	990	1480	2220	3705	6170
		BAR	19,6	51,1	68,1	102,1	153,2	255,3	425,5
	Hydrostatic Shell Test	PSI	450	1125	1500	2225	3350	5575	9275
		BAR	30	77	103	154	230	383	639
	Seat Test	Min. PSI	315	815	1090	1630	2442	4075	6787
		Min. BAR	21,5	56,2	74,9	112,3	168,5	280,8	468

Material			Class						
			150	300	400	600	900	1500	2500
Carbon Steel ASTM A352 Gr. LCB	Maximum Cold Working Pressure	PSI	265	695	925	1390	2085	3470	5785
		BAR	18,4	47,9	63,8	95,9	143,8	239,4	399
	Hydrostatic Shell Test	PSI	400	1050	1400	2100	3150	5225	8700
		BAR	28	72	96	144	216	360	599
	Seat Test	Min. PSI	292	765	1018	1529	2294	3817	6364
		Min. BAR	20,2	52,7	70,2	105,5	158,2	263,3	438,9

Material			Class						
			150	300	400	600	900	1500	2500
Stainless Steel ASTM A351 Gr. CF8M	Maximum Cold Working Pressure	PSI	275	720	960	1440	2160	3600	6000
		BAR	19,0	49,6	66,2	99,3	148,9	248,1	413,6
	Hydrostatic Shell Test	PSI	425	1100	1450	2175	3250	5400	9000
		BAR	29	75	100	149	224	373	621
	Seat Test	Min. PSI	303	792	1056	1584	2376	3960	6600
		Min. BAR	20,9	54,6	72,8	109,2	163,7	272,9	454,9

Material			Class						
			150	300	400	600	900	1500	2500
ASTM A216 Gr.WCC ASTM A352 Gr. LCC ASTM A352 Gr. LC2 ASTM A890 Gr. 4A	Maximum Cold Working Pressure	PSI	290	750	1000	1500	2250	3750	6250
		BAR	20	51,7	69	103,4	155,2	258,6	431,0
	Hydrostatic Shell Test	PSI	450	1125	1500	2250	3375	5625	9375
		BAR	30	78	104	156	233	388	647
	Seat Test	Min. PSI	319	825	1100	1650	2475	4125	6875
		Min. BAR	22	56,9	75,9	113,7	170,7	284,5	474

Standard wrench type 8K (Short)

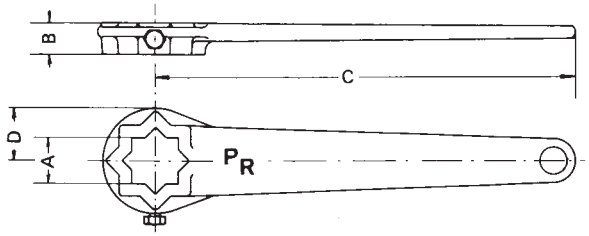

A	B	C	D
17	14	140	20
19	16	150	22
24	18	200	26
27	20	225	30
30	22	280	33
36	26	330	38
50	40	420	52

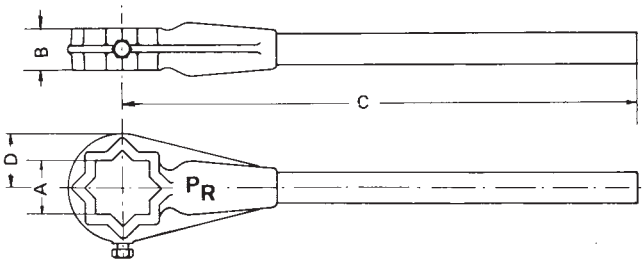

A	B	C	D
55	45	815	58
65	50	940	70
70	50	1090	76

Wrench type 8L (Long)

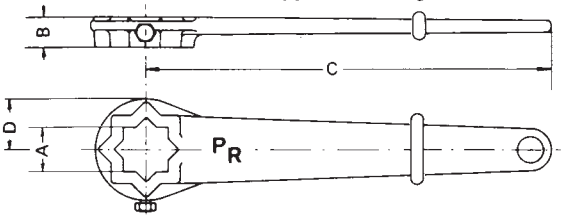

A	B	C	D
24	20	300	30
27	22	340	33
30	26	420	38
36	26	470	42

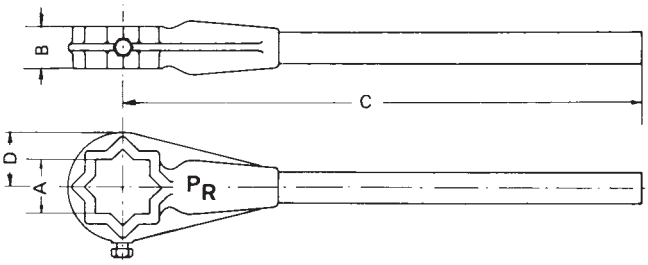

A	B	C	D
50	45	815	58
55	50	1090	70
65	50	1270	80

Manual
Lubricant Gun type BC-1.

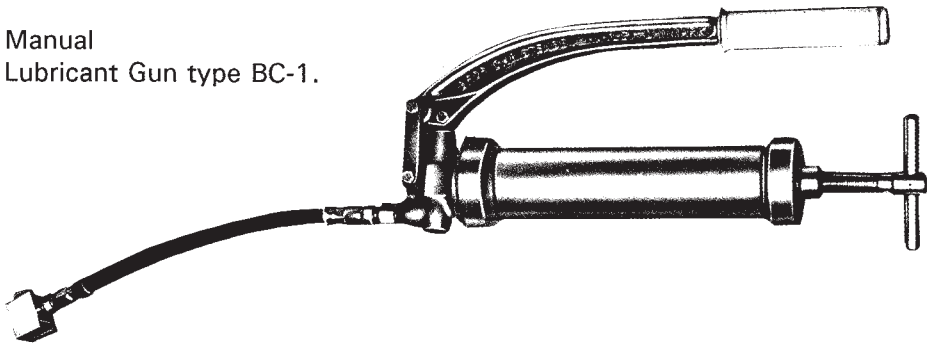

Cartridge for
Lubricant Gun
300 ccm.

Pneumatic Lubricant Gun type BC-2
Working Pressures: Max. 8 Bar (115 Psi).

Cartridge for
Lubricant Gun
1250 ccm.

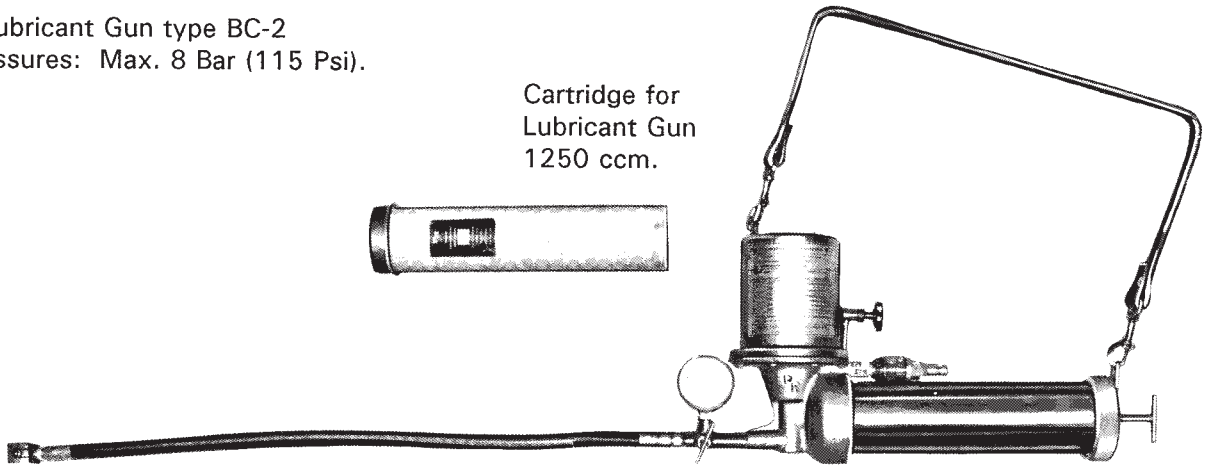

Grease Gun for Gear
Lubrication type 315-2

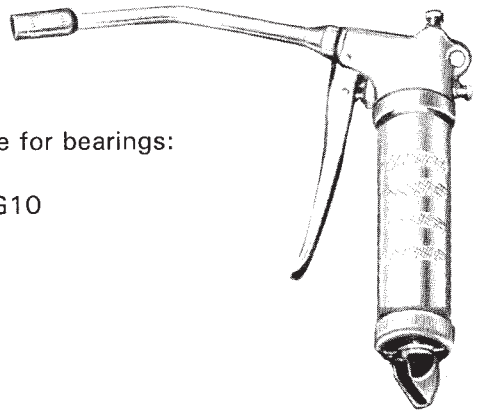

Grease for bearings:

BCH G10

Grease for worms and gear wheel:

BCH G10

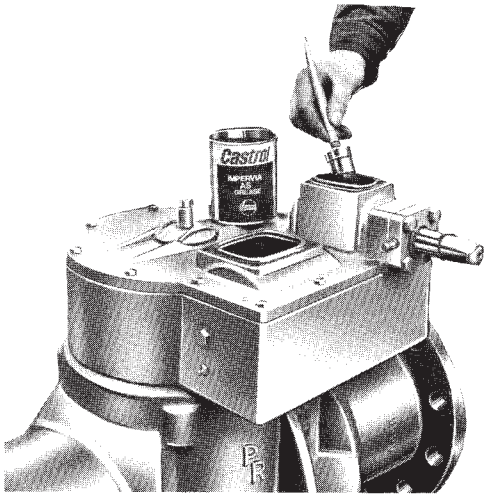

Pattern	Connection ends	1/2"	3/4"	1"	1 1/4"	1 1/2"	2"	2 1/2"	3"	4"	5"	6"	8"	10"	12"	14"	16"	18"	20"	24"	30"	36"	Page
Class 150	SHORT			* *	* *	* *	* *	* *	* *	* *	* *	* *	* *	* *	* *								B13 B14
	REGULAR Full bore	* * *	* * *	* * *	* * *	* * *	* * *	* * *	* * *	* * *	* *	* *	* *	* *	* *	* *	* *	* *	* *	* *			B15 B16 B17
	REGULAR				* * *	* * *	* * *	* * *	* * *	* * *	* *	* *	* *	* *	* *	* *	* *	* *	* *	* *			B18 B19 B20
	VENTURI					* *	* *	* *	* *	* *	* *	* *	* *	* *	* *	* *	* *	* *	* *	* *	* *		B21 B22
Class 300	SHORT			* *	* *	* *	* *	* *	* *	* *		* *	* *	* *	* *								B23 B24
	REGULAR Full bore	* * *	* * *	* * *	* * *	* * *	* * *	* * *	* * *	* * *		* *	* *	* *	* *	*	*	*	*				B25 B26 B27
	REGULAR					* * *	* * *	* * *	* * *	* * *		* *	* *	* *	* *	* *	* *	* *	* *				B28 B29 B30
	VENTURI					* *	* *	* *	* *	* *		* *	* *	* *	* *	* *	* *	* *	* *	* *	* *		B31 B32
Class 600	REGULAR Full bore	* * *	* * *	* * *	* * *	* * *	* * *	* * *	* * *	* * *		* *	* *	* *	* *	* *	* *	* *	* *				B33 B34 B35
	REGULAR					* *	* *	* *	* *	* *		* *	* *	* *	* *	* *	* *	* *	* *				B36 B37
	VENTURI					* *	* *	* *	* *	* *		* *	* *	* *	* *	* *	* *	* *	* *	* *	* *		B38 B39
Class 900	REGULAR Full bore	* * *	* * *	* * *	* * *	* * *	* * *	* * *	* * *	* * *		* *	* *	* *	* *	* *	* *	* *					B40 B41 B42
	REGULAR					* *	* *	* *	* *	* *		* *	* *	* *	* *	* *	* *	* *					B43 B44
	VENTURI					* *	* *	* *	* *	* *		* *	* *	* *	* *	* *	* *	* *	* *				B45 B46
Class 1500	REGULAR Full bore	* * *	* * *	* * *	* * *	* * *	* * *	* * *	* * *	* * *		* *	* *	* *	* *	* *	* *	* *					B47 B48 B49
	REGULAR					* *	* *	* *	* *	* *		* *	* *	* *	* *	* *	* *	* *					B50 B51
	VENTURI					* *	* *	* *	* *	* *		* *	* *	* *	* *	* *	* *	* *					B52 B53
Class 2500	REGULAR Full bore	* * *	* * *	* * *	* * *	* * *	* * *	* * *	* * *	* *		* *	* *	* *	* *	* *	* *	* *					B54 B55 B56
	REGULAR					* *	* *	* *	* *	* *		* *	* *	* *	* *	* *	* *	* *					B57 B58
	VENTURI					* *	* *	* *	* *	* *		* *	* *	* *	* *	* *	* *	* *					B59 B60

STRAIGHTWAY TAPER PLUG VALVES

CAST STEEL CLASS 150
SHORT PATTERN
RECTANGULAR PORT

Class	Max. CWP	Test Pressure	Pattern	Connections	Port	Materials		Operation
						Body & Cover	Plug	
150	285 Psi	Shell 450 Psi Seat 315 Psi	Straight-way Short	Flanges R.F. or R.J. ASME B 16.5 Face to Face ASME B 16.10	Rectan-gular	Cast Steel ASTM A 216 Grade WCB Cover: EN 10025 S355J0 S355J2G3	Cast Iron ASTM A 126 Class B	Manual
							Steel	

	WRENCH TYPE 8 K	GEAR TYPE C	GEAR TYPE D
	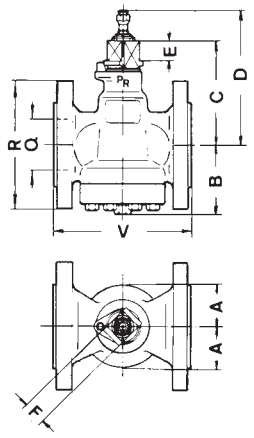	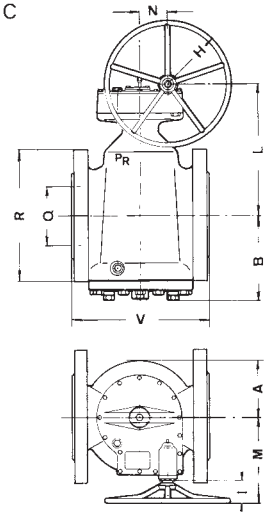	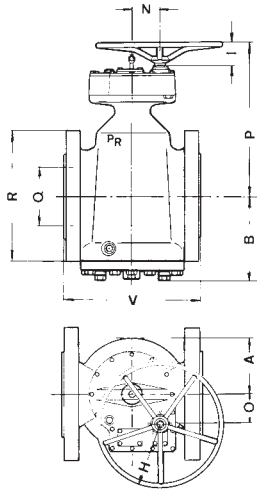
Plug	DN 1" - 6"	DN 1" - 12"	DN 6" - 12"
Cast Iron	5-AS 70124 N	5-AS 70124 C	5-AS 70124 D
Steel	5-AS 70127 N	5-AS 70127 C	5-AS 70127 D

																Raised Face	Ring Joint
DN	A	B	C	D	E	F	H	I	L	M	N	O	P	Q	R	V	V
1"	40	86	123	163	24	30	45	16	97	104	32			25	108	*140	*152
1 1/4"	41	86	123	163	24	30	45	16	97	104	32			32	117	*165	*178
1 1/2"	44	97	128	167	24	30	45	16	101	104	32			38	127	165	178
2"	60	102	148	188	24	30	150	101	137	181	47			51	152	178	191
2 1/2"	76	115	171	224	32	36	150	101	155	181	47			64	178	191	203
3"	69	119	192	248	42	50	150	101	163	181	47			76	191	203	216
4"	100	164	224	285	47	55	150	101	192	195	65			102	229	229	241
6"	120	210	294	352	51	65	200	101	315	268	85	46	438	152	279	267	279
8"	127	232					200	101	340	268	85	46	465	203	343	292	305
10"	157	293					300	101	424	293	95	70	548	254	406	330	343
12"	162	336					300	101	461	293	95	70	585	305	483	356	368

Note: * Not included in the standards.

STRAIGHTWAY TAPER PLUG VALVES

CAST STEEL CLASS 150
SHORT PATTERN
RECTANGULAR PORT

Class	Max. CWP	Test Pressure	Pattern	Connections	Port	Materials		Operation
						Body & Cover	Plug	
150	258 Psi	Shell 450 Psi Seat 315 Psi	Straight-way Short	Welding Ends ASME B 16.25 End to End ASME B 16.10	Rectan-gular	Cast Steel ASTM A 216 Grade WCB Cover: EN 10025 S355J0 S355J2G3	Cast Iron ASTM A 126 Class B Steel	Manual

	WRENCH TYPE 8 K	GEAR TYPE C	GEAR TYPE D
	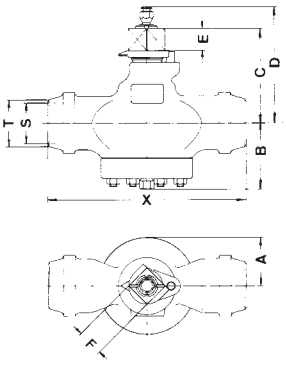	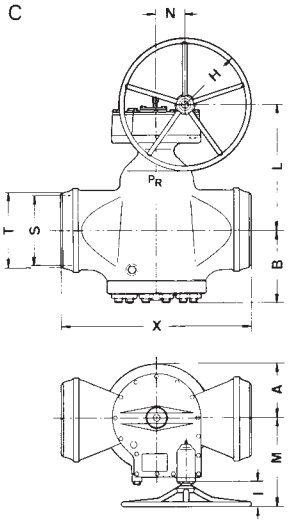	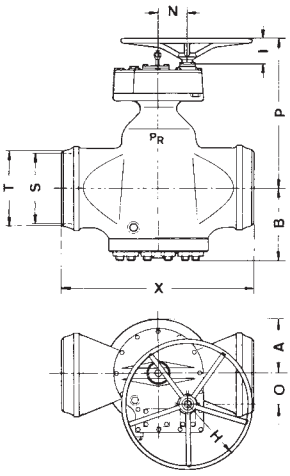
Plug	DN 1" - 6"	DN 1" - 12"	DN 6" - 12"
Cast Iron	5-AS 70524 N	5-AS 70524 C	5-AS 70524 D
Steel	5-AS 70527 N	5-AS 70527 C	5-AS 70527 D

DN	A	B	C	D	E	F	H	I	L	M	N	O	P	S	T	X
1"	40	86	123	163	24	30	45	16	97	104	32			Inside pipe dimension to be specified by purchaser.	*35,4	*172
1 1/4"	41	86	123	163	24	30	45	16	97	104	32				*44,2	*200
1 1/2"	44	97	128	167	24	30	45	16	101	104	32				*50,3	*241
2"	60	102	148	188	24	30	150	101	137	181	47				*62,3	268
2 1/2"	76	115	171	224	32	36	150	101	155	181	47				75	305
3"	69	119	192	248	42	50	150	101	163	181	47				91	330
4"	100	164	224	285	47	55	150	101	192	195	65				117	356
6"	136	183	294	352	51	65	200	101	315	268	85	46	438		172	457
8"	145	247					200	101	342	268	85	46	465		223	521
10"	195	277					300	101	416	293	95	70	540		278	559
12"	193	304					300	101	432	293	95	70	556		329	635

Note: * Not included in the standards.

STRAIGHTWAY TAPER PLUG VALVES

CAST STEEL CLASS 150
REGULAR PATTERN
RECTANGULAR PORT FULL BORE

Class	Max. CWP	Test Pressure	Pattern	Connections	Port	Materials		Operation
						Body & Cover	Plug	
150	285 Psi	Shell 450 Psi Seat 315 Psi	Straight-way Regular	Screwed API 5B table 2.1 or ASME B1.20.1	Rectan-gular Full bore **	Cast Steel ASTM A 216 Grade WCB Cover: EN 10025 S355J0 S355J2G3	Cast Iron ASTM A 126 Class B Steel	Manual

** 1/2" and 3/4" Round port full bore.

	WRENCH TYPE 8 K	GEAR TYPE C
	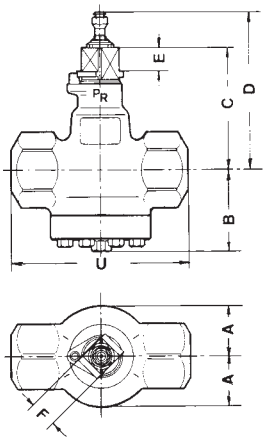	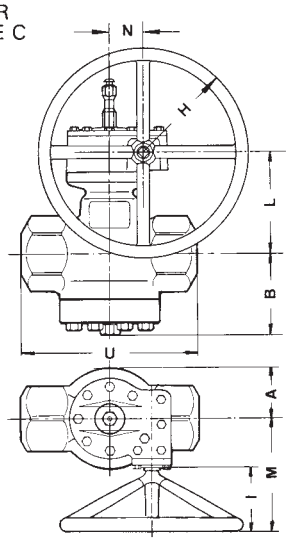
Plug	DN 1/2" - 4"	DN 1/2" - 4"
Cast Iron	5-AR 70024 N	5-AR 70024 C
Steel	5-AR 70027 N	5-AR 70027 C

DN	A	B	C	D	E	F	H	I	L	M	N	U
1/2"	48	83	120	160	24	30	45	16	94	104	32	115
3/4"	48	82	121	161	24	30	45	16	94	104	32	115
1"	40	86	123	163	24	30	45	16	97	104	32	115
1 1/4"	44	97	128	168	24	30	45	16	101	104	32	130
1 1/2"	60	102	144	185	24	30	150	101	137	181	47	150
2"	71	115	171	225	32	36	150	101	155	181	47	165
2 1/2"	83	148	196	252	42	50	150	101	168	181	47	195
3"	92	164	224	285	47	55	150	101	192	195	65	220
4"	114	180	262	327	51	65	150	101	224	195	65	270

STRAIGHTWAY TAPER PLUG VALVES

CAST STEEL CLASS 150
REGULAR PATTERN
RECTANGULAR PORT FULL BORE

Class	Max. CWP	Test Pressure	Pattern	Connections	Port	Materials		Operation
						Body & Cover	Plug	
150	285 Psi	Shell 450 Psi Seat 315 Psi	Straight-way Regular	Flanges R.F. or R.J. ASME B 16.5 Face to Face ASME B 16.10	Rectan-gular Full bore **	Cast Steel ASTM A 216 Grade WCB Cover: EN 10025 S355J0 S355J2G3	Cast Iron ASTM A 126 Class B Steel	Manual

** 1/2" and 3/4" Round port full bore.

	WRENCH TYPE 8 K	GEAR TYPE C	GEAR TYPE D
	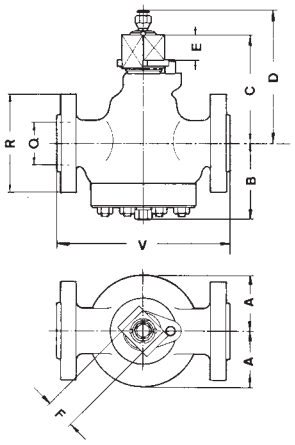	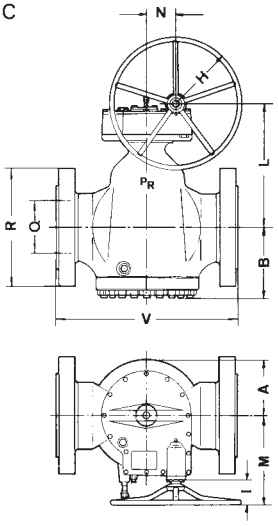	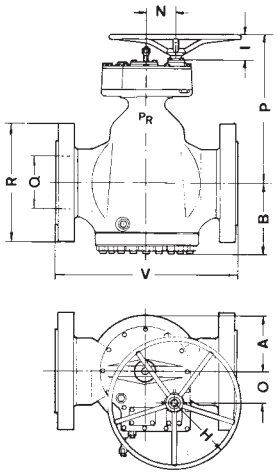
Plug	DN 1/2" - 4"	DN 1/2" - 24"	DN 6" - 24"
Cast Iron	5-AR 70124 N	5-AR 70124 C	5-AR 70124 D
Steel	5-AR 70127 N	5-AR 70127 C	5-AR 70127 D

																Raised Face	Ring Joint
DN	A	B	C	D	E	F	H	I	L	M	N	O	P	Q	R	V	V
1/2"	48	83	120	160	24	30	45	16	94	104	32			*13	89	*121	*133
3/4"	48	82	121	161	24	30	45	16	94	104	32			*19	98	*121	*133
1"	40	86	123	163	24	30	45	16	97	104	32			25	108	*140	*152
1 1/4"	44	97	128	168	24	30	45	16	101	104	32			32	117	*165	*178
1 1/2"	60	102	144	185	24	30	150	101	137	181	47			38	127	*165	*178
2"	71	115	171	225	32	36	150	101	155	181	47			51	152	*191	*203
2 1/2"	83	148	196	239	42	50	150	101	168	181	47			64	178	*210	*222
3"	92	164	224	285	47	55	150	101	192	195	65			76	191	*229	*241
4"	114	180	262	327	51	65	150	101	224	195	65			102	229	305	318
6"	145	247					200	101	342	268	85	46	465	152	279	394	406
8"	195	277					300	101	416	293	95	70	540	203	343	457	470
10"	213	314					300	101	492	361	135	69	626	254	406	533	546
12"	285	394					300	101	604	400	160	108	738	305	483	610	622
14"	288	418					350	101	616	423	175	130	750	337	533	686	699
16"	320	445					350	101	676	460	176	168	810	387	597	762	775
18"	370	520					350	101	760	483	196	192	894	438	635	864	876
20"	390	550					450	101	855	501	200	210	989	489	699	914	927
24"	440	580					450	101	884	568	246	279	1018	591	813	1067	1080

Note: * Not included in the standards.

STRAIGHTWAY TAPER PLUG VALVES

CAST STEEL CLASS 150
REGULAR PATTERN
RECTANGULAR PORT FULL BORE

Class	Max. CWP	Test Pressure	Pattern	Connections	Port	Materials		Operation
						Body & Cover	Plug	
150	285 Psi	Shell 450 Psi Seat 315 Psi	Straight-way Regular	Welding Ends ASME B 16.25 End to End ASME B 16.10	Rectan-gular Full bore **	Cast Steel ASTM A 216 Grade WCB Cover: EN 10025 S355J0 S355J2G3	Cast Iron ASTM A 126 Class B Steel	Manual

** 1/2" and 3/4" Round port full bore.

	WRENCH TYPE 8 K	GEAR TYPE C	GEAR TYPE D
	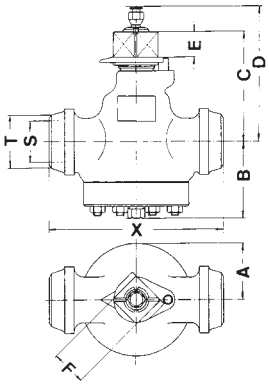	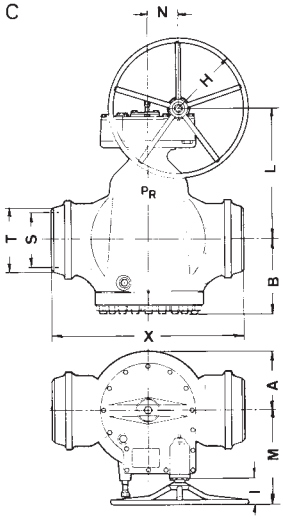	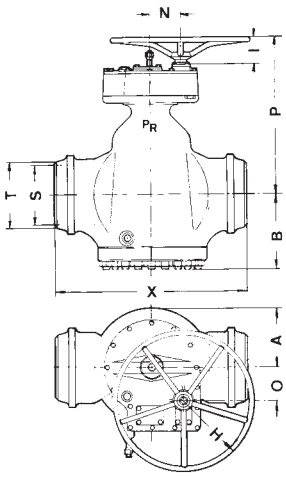
Plug	DN 1/2" - 4"	DN 1/2" - 24"	DN 6" - 24"
Cast Iron	5-AR 70524 N	5-AR 70524 C	5-AR 70524 D
Steel	5-AR 70527 N	5-AR 70527 C	5-AR 70527 D

DN	A	B	C	D	E	F	H	I	L	M	N	O	P	S	T	X
1/2"	48	83	120	160	24	30	45	16	94	104	32			Inside pipe dimension to be specified by purchaser.	*23,3	*140
3/4"	48	82	121	161	24	30	45	16	94	104	32				*28,7	*149
1"	40	86	123	163	24	30	45	16	97	104	32				*35,4	*172
1 1/4"	44	97	128	168	24	30	45	16	101	104	32				*44,2	*200
1 1/2"	60	102	144	185	24	30	150	101	137	181	47				*50,3	*241
2"	71	115	171	225	32	36	150	101	155	181	47				*62,3	267
2 1/2"	83	148	196	252	42	50	150	101	168	181	47				75	305
3"	92	164	224	285	47	55	150	101	192	195	65				91	330
4"	114	180	262	327	51	65	150	101	224	195	65				117	356
6"	145	247					200	101	342	268	85	46	465		172	457
8"	195	277					300	101	416	293	95	70	540		223	521
10"	213	314					300	101	492	361	135	69	626		278	559
12"	285	394					300	101	604	400	160	108	738		329	635
14"	288	418					350	101	616	423	175	130	750		362	*762
16"	320	445					350	101	676	460	176	168	810		413	*838
18"	370	520					350	101	760	483	196	192	894		464	*914
20"	390	550					450	101	855	501	200	210	989		516	*991
24"	440	580					450	101	884	568	246	279	1018		619	*1143

Note: * Not included in the standards.

STRAIGHTWAY TAPER PLUG VALVES

CAST STEEL CLASS 150
REGULAR PATTERN
RECTANGULAR PORT

Class	Max. CWP	Test Pressure	Pattern	Connections	Port	Materials		Operation
						Body & Cover	Plug	
150	285 Psi	Shell 450 Psi Seat 315 Psi	Straight-way Regular	Screwed API 5B table 2.1 or ASME B1.20.1	Rectan-gular	Cast Steel ASTM A 216 Grade WCB Cover: EN 10025 S355J0 S355J2G3	Cast Iron ASTM A 126 Class B Steel	Manual

WRENCH
TYPE 8 K

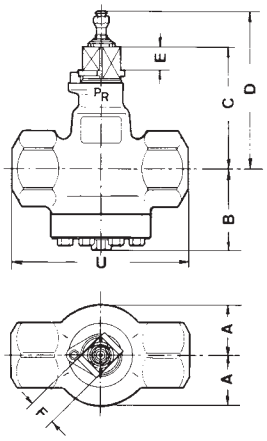

GEAR
TYPE C

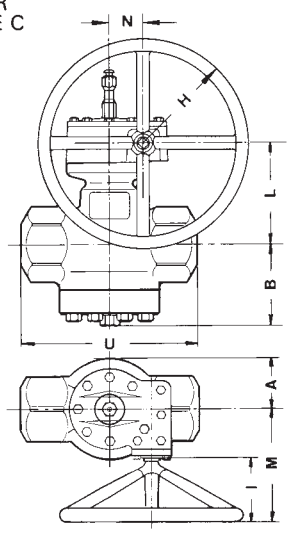

Plug	DN 1 1/2" - 4"	DN 1 1/2" - 4"
Cast Iron	5-AV 70024 N	5-AV 70024 C
Steel	5-AV 70027 N	5-AV 70027 C

DN	A	B	C	D	E	F	H	I	L	M	N	U
1 1/2"	44	97	128	167	24	30	45	16	101	104	32	150
2"	60	102	148	188	24	30	150	101	137	181	47	165
2 1/2"	76	115	171	224	32	36	150	101	155	181	47	195
3"	83	148	196	252	42	50	150	101	168	181	47	220
4"	98	160	211	265	42	50	150	101	181	195	65	270

STRAIGHTWAY TAPER PLUG VALVES

CAST STEEL CLASS 150
REGULAR PATTERN
RECTANGULAR PORT

Class	Max. CWP	Test Pressure	Pattern	Connections	Port	Materials		Operation
						Body & Cover	Plug	
150	285 Psi	Shell 450 Psi Seat 315 Psi	Straight-way Regular	Flanges R.F. or R.J. ASME B 16.5 Face to Face ASME B 16.10	Rectan-gular	Cast Steel ASTM A 216 Grade WCB Cover: EN 10025 S355J0 S355J2G3	Cast Iron ASTM A 126 Class B	Manual
							Steel	

	WRENCH TYPE 8 K	GEAR TYPE C	GEAR TYPE D
	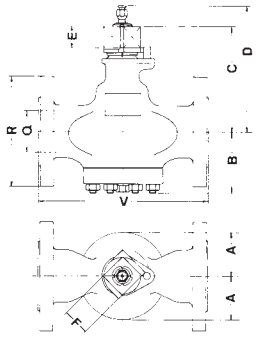	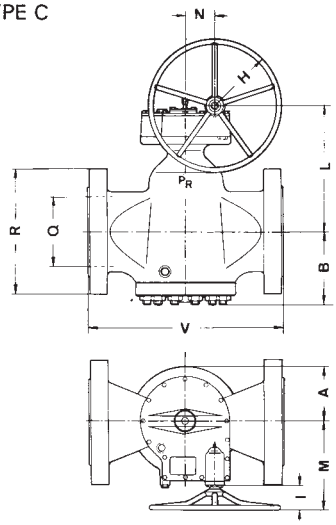	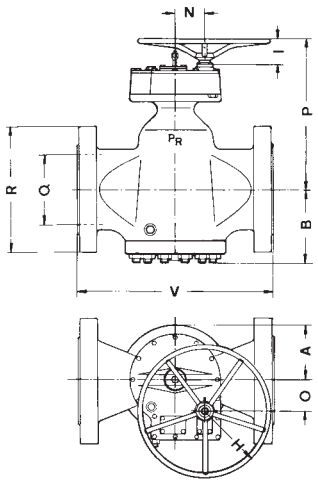
Plug	DN 1 1/2" - 6"	DN 1 1/2" - 24"	DN 6" - 24"
Cast Iron	5-AV 70124 N	5-AV 70124 C	5-AV 70124 D
Steel	5-AV 70127 N	5-AV 70127 C	5-AV 70127 D

																Raised Face	Ring Joint
DN	A	B	C	D	E	F	H	I	L	M	N	O	P	Q	R	V	V
1 1/2"	44	97	128	167	24	30	45	16	101	104	32			38	127	*165	*178
2"	60	102	148	188	24	30	150	101	137	181	47			51	152	*191	*203
2 1/2"	76	115	171	224	32	36	150	101	155	181	47			64	178	*210	*222
3"	83	148	196	252	42	50	150	101	168	181	47			76	191	*229	*241
4"	98	160	211	265	42	50	150	101	181	195	65			102	229	305	318
6"	136	183	294	357	51	65	200	101	315	168	85	46	438	152	279	394	406
8"	151	249					200	101	358	268	85	46	481	203	343	457	470
10"	196	265					300	101	395	293	95	70	519	254	406	533	546
12"	233	299					300	101	500	293	95	70	624	305	483	610	622
14"	264	361					300	101	570	361	135	69	704	337	533	686	699
16"	389	416					300	101	626	400	160	108	760	387	597	762	775
18"	305	440					350	101	642	423	175	130	776	438	635	864	876
20"	338	468					350	101	697	460	176	168	831	489	699	914	927
24"	414	608					350	101	878	483	196	192	1012	591	813	1067	1080

Note: * Not included in the standards.

STRAIGHTWAY TAPER PLUG VALVES

CAST STEEL CLASS 150
REGULAR PATTERN
RECTANGULAR PORT

Class	Max. CWP	Test Pressure	Pattern	Connections	Port	Materials		Operation
						Body & Cover	Plug	
150	285 Psi	Shell 450 Psi Seat 315 Psi	Straight-way Regular	Welding Ends ASME B 16.25 End to End ASME B 16.10	Rectan-gular	Cast Steel ASTM A 216 Grade WCB Cover: EN 10025 S355J0 S355J2G3	Cast Iron ASTM A 126 Class B	Manual
							Steel	

	WRENCH TYPE 8 K	GEAR TYPE C	GEAR TYPE D
	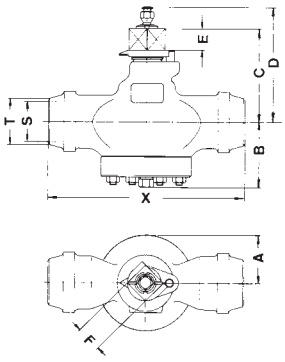	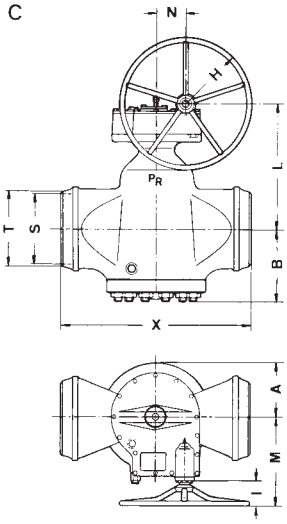	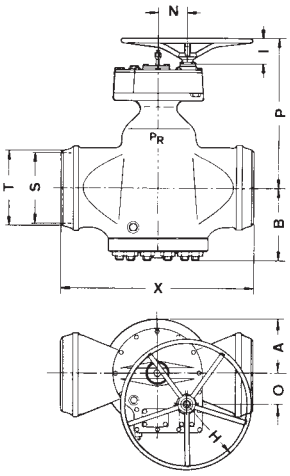
Plug	DN 1 1/2" - 6"	DN 1 1/2" - 24"	DN 6" - 24"
Cast Iron	5-AV 70524 N	5-AV 70524 C	5-AV 70524 D
Steel	5-AV 70527 N	5-AV 70527 C	5-AV 70527 D

DN	A	B	C	D	E	F	H	I	L	M	N	O	P	S	T	X
1 1/2"	44	97	128	167	24	30	45	16	101	104	32			Inside pipe dimension to be specified by purchaser.	*50,3	*241
2"	60	102	148	188	24	30	150	101	137	181	47				*62,3	267
2 1/2"	76	115	171	224	32	36	150	101	155	181	47				75	305
3"	83	148	196	252	42	50	150	101	168	181	47				91	330
4"	98	160	211	265	42	50	150	101	181	195	65				117	356
6"	136	183	294	357	51	65	200	101	315	268	85	46	438		172	457
8"	151	249					200	101	358	268	85	46	481		223	521
10"	196	265					300	101	395	293	95	70	519		278	559
12"	233	299					300	101	500	293	95	70	624		329	635
14"	264	361					300	101	570	361	135	69	704		362	*762
16"	389	416					300	101	626	400	160	108	760		413	*838
18"	305	440					350	101	642	423	175	130	776		464	*914
20"	338	468					350	101	697	460	176	168	831		516	*991
24"	414	608					350	101	878	483	196	192	1012		619	*1143

Note: * Not included in the standards.

STRAIGHTWAY TAPER PLUG VALVES

CAST STEEL CLASS 150
VENTURI PATTERN
RECTANGULAR PORT

Class	Max. CWP	Test Pressure	Pattern	Connections	Port	Materials		Operation
						Body & Cover	Plug	
150	285 Psi	Shell 450 Psi Seat 315 Psi	Straight-way Venturi	Flanges R.F. or R.J. ASME B 16.5 Face to Face ASME B 16.10	Rectan-gular	Cast Steel ASTM A 216 Grade WCB Cover: EN 10025 S355J0 S355J2G3	Cast Iron ASTM A 126 Class B Steel	Manual

	WRENCH TYPE 8 K	GEAR TYPE C	GEAR TYPE D
	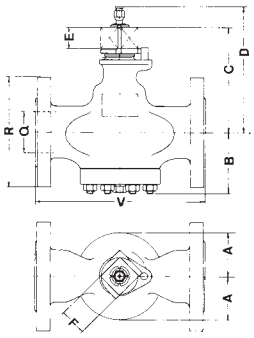	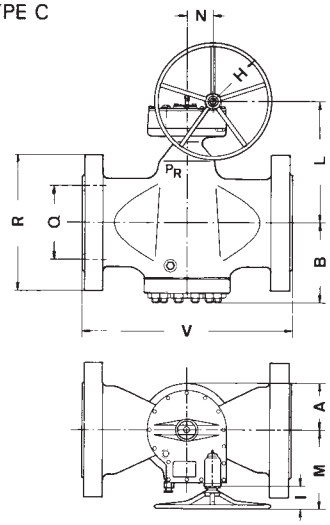	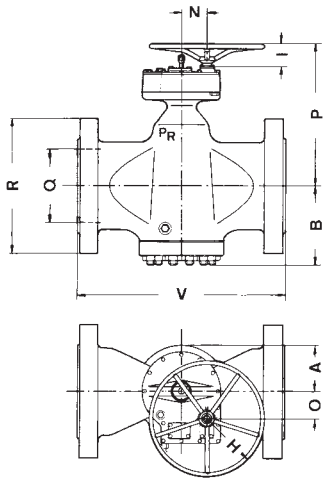
Plug	DN 1 1/2" - 4"	DN 1 1/2" - 36"	DN 8" - 36"
Cast Iron	5-AT 70124 N	5-AT 70124 C	5-AT 70124 D
Steel	5-AT 70127 N	5-AT 70127 C	5-AT 70127 D

																Raised Face	Ring Joint
DN	A	B	C	D	E	F	H	I	L	M	N	O	P	Q	R	V	V
1 1/2"	44	97	128	160	24	30	45	16	101	104	32			38	127	*165	*178
2"	60	102	144	176	24	30	150	101	137	181	47			51	152	178	191
2 1/2"	76	115	171	214	32	36	150	101	155	181	47			64	178	*210	*222
3"	69	119	192	248	42	50	150	101	163	181	47			76	191	203	216
4"	92	164	224	274	47	55	150	101	192	195	65			102	229	229	241
6"	106	179					150	101	222	195	71			152	279	394	406
8"	145	232					200	101	338	268	85	46	461	203	343	457	470
10"	146	245					200	101	370	268	85	46	493	254	406	533	546
12"	170	270					300	101	406	293	95	70	530	305	483	610	622
14"	174	313					300	101	430	293	95	70	554	337	533	686	699
16"	193	347					300	101	520	361	135	69	654	387	597	762	775
18"	220	340					300	101	590	400	160	108	724	438	635	864	876
20"	245	385					300	101	617	400	160	108	751	489	699	914	927
24"	280	460					350	101	700	423	175	130	834	541	813	1067	1080
30"	350	590					350	101	827	483	196	192	965	*743	*984	*1295	*1308
36"	425	625					350	101	839	501	200	210	973	*895	*1168	*1600	*1613

Note: * Not included in the standards.

STRAIGHTWAY TAPER PLUG VALVES

CAST STEEL CLASS 150
VENTURI PATTERN
RECTANGULAR PORT

Class	Max. CWP	Test Pressure	Pattern	Connections	Port	Materials		Operation
						Body & Cover	Plug	
150	285 Psi	Shell 450 Psi Seat 315 Psi	Straight-way Venturi	Welding Ends ASME B 16.25 End to End ASME B 16.10	Rectan-gular	Cast Steel ASTM A 216 Grade WCB Cover: EN 10025 S355J0 S355J2G3	Cast Iron ASTM A 126 Class B Steel	Manual

	WRENCH TYPE 8 K	GEAR TYPE C	GEAR TYPE D
	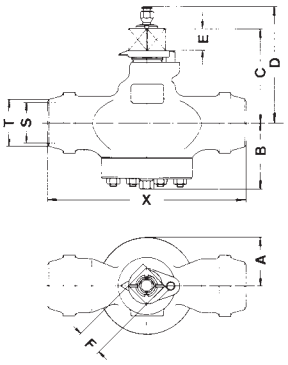	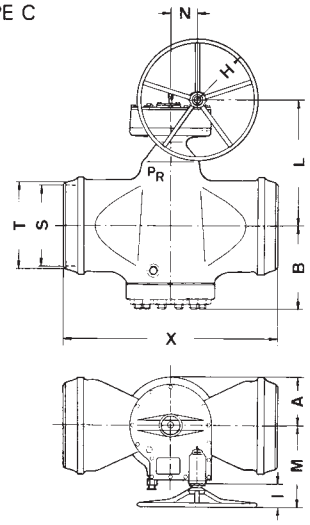	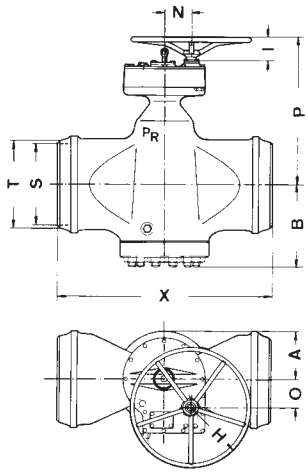
Plug	DN 1 1/2" - 4"	DN 1 1/2" - 36"	DN 8" - 36"
Cast Iron	5-AT 70524 N	5-AT 70524 C	5-AT 70524 D
Steel	5-AT 70527 N	5-AT 70527 C	5-AT 70527 D

DN	A	B	C	D	E	F	H	I	L	M	N	O	P	S	T	X
1 1/2"	44	97	128	160	24	30	45	16	101	104	32			Inside pipe dimension to be specified by purchaser.	*50,3	*241
2"	60	102	144	176	24	30	150	101	137	181	47				*62,3	*267
2 1/2"	76	115	171	214	32	36	150	101	155	181	47				75	*305
3"	69	119	192	248	42	50	150	101	163	181	47				91	*330
4"	92	164	224	274	47	55	150	101	192	195	65				117	*356
6"	106	179					150	101	222	195	71				172	*457
8"	145	232					200	101	338	268	85	46	461		223	*521
10"	146	245					200	101	370	268	85	46	493		278	*559
12"	170	270					300	101	406	293	95	70	530		329	*635
14"	174	313					300	101	430	293	95	70	554		362	*762
16"	193	347					300	101	520	361	135	69	654		413	*838
18"	220	340					300	101	590	400	160	108	724		464	*914
20"	245	385					300	101	617	400	160	108	751		516	*991
24"	280	460					350	101	700	423	175	130	834		619	*1143
30"	350	590					350	101	827	483	196	192	965		772	*1397
36"	425	625					350	101	839	501	200	210	973		927	*1727

STRAIGHTWAY TAPER PLUG VALVES

CAST STEEL CLASS 300
SHORT PATTERN
RECTANGULAR PORT

Class	Max. CWP	Test Pressure	Pattern	Connections	Port	Materials		Operation
						Body & Cover	Plug	
300	740 Psi	Shell 1125 Psi Seat 815 Psi	Straight-way Short	Flanges R.F. or R.J. ASME B 16.5 Face to Face ASME B 16.10	Rectan-gular	Cast Steel ASTM A 216 Grade WCB Cover: EN 10025 S355J0 S355J2G3	Cast Iron ASTM A 126 Class B Steel	Manual

	WRENCH TYPE 8 K	GEAR TYPE C	GEAR TYPE D
	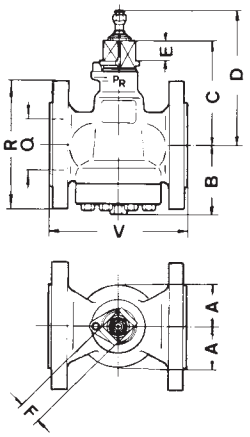	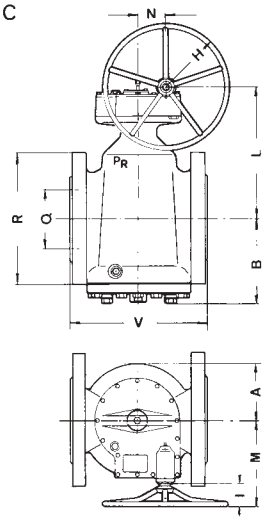	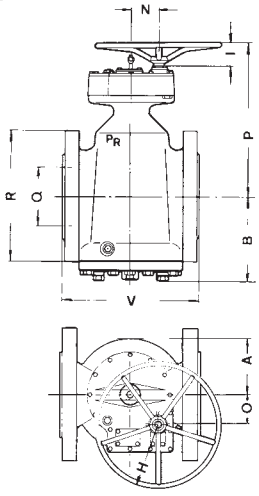
Plug	DN 1" - 6"	DN 1" - 12"	DN 6" - 12"
Cast Iron	5-AS 70144 N	5-AS 70144 C	5-AS 70144 D
Steel	5-AS 70147 N	5-AS 70147 C	5-AS 70147 D

																Raised Face	Ring Joint
DN	A	B	C	D	E	F	H	I	L	M	N	O	P	Q	R	V	V
1"	40	86	123	163	24	30	45	16	97	104	32			25	124	159	172
1 1/4"	41	86	123	163	24	30	45	16	97	104	32			32	133	*178	*191
1 1/2"	44	97	128	167	24	30	45	16	101	104	32			38	156	191	203
2"	60	102	148	188	24	30	150	101	137	181	47			51	165	216	232
2 1/2"	76	115	171	224	32	36	150	101	155	181	47			64	191	241	257
3"	69	119	192	248	42	50	150	101	163	181	47			76	210	283	299
4"	98	160	211	265	42	50	150	101	181	195	65			102	254	305	321
6"	136	183	294	357	51	65	200	101	315	268	85	46	438	152	318	403	419
8"	145	247					200	101	342	268	85	46	465	203	381	419	435
10"	195	277					300	101	416	293	95	70	540	254	445	457	473
12"	193	304					300	101	432	293	95	70	556	305	521	502	518

Note: * Not included in the standards.

STRAIGHTWAY TAPER PLUG VALVES

CAST STEEL CLASS 300
SHORT PATTERN
RECTANGULAR PORT

Class	Max. CWP	Test Pressure	Pattern	Connections	Port	Materials		Operation
						Body & Cover	Plug	
300	740 Psi	Shell 1125 Psi Seat 815 Psi	Straight-way Short	Welding Ends ASME B 16.25 End to End ASME B 16.10	Rectan-gular	Cast Steel ASTM A 216 Grade WCB Cover: EN 10025 S355J0 S355J2G3	Cast Iron ASTM A 126 Class B Steel	Manual

	WRENCH TYPE 8 K	GEAR TYPE C	GEAR TYPE D
	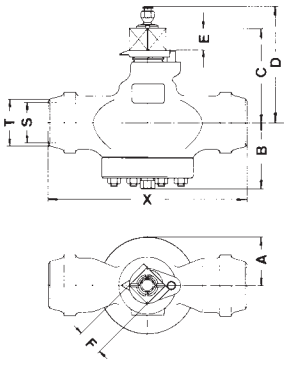	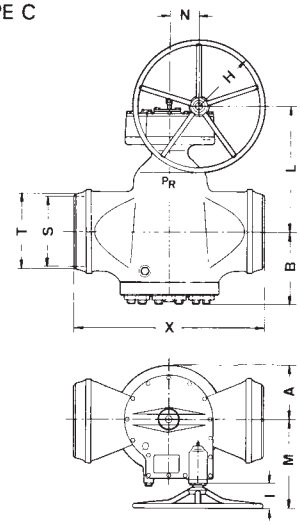	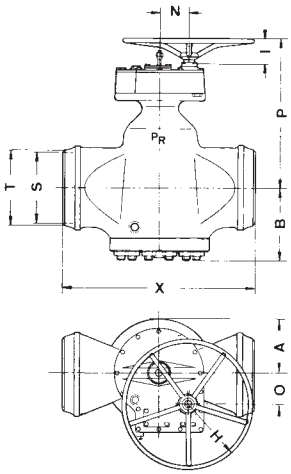
Plug	DN 1" - 6"	DN 1" - 12"	DN 6" - 12"
Cast Iron	5-AS 70544 N	5-AS 70544 C	5-AS 70544 D
Steel	5-AS 70547 N	5-AS 70547 C	5-AS 70547 D

DN	A	B	C	D	E	F	H	I	L	M	N	O	P	S	T	X
1"	40	86	123	163	24	30	45	16	97	104	32			Inside pipe dimension to be specified by purchaser.	*35,4	*172
1 1/4"	41	86	123	163	24	30	45	16	97	104	32				*44,2	*200
1 1/2"	44	97	128	167	24	30	45	16	101	104	32				*50,3	*241
2"	60	102	148	188	24	30	150	101	137	181	47				*62,3	267
2 1/2"	70	115	171	224	32	36	150	101	155	181	47				75	305
3"	69	119	192	248	42	50	150	101	163	181	47				91	330
4"	98	160	211	265	42	50	150	101	181	195	65				117	356
6"	136	183	294	352	51	65	200	101	315	268	85	46	438		172	457
8"	145	247					200	101	342	268	85	46	465		223	521
10"	195	277					300	101	416	293	95	70	540		278	559
12"	193	304					300	101	432	293	95	70	556		329	635

Note: * Not included in the standards.

STRAIGHTWAY TAPER PLUG VALVES

CAST STEEL CLASS 300
REGULAR PATTERN
RECTANGULAR PORT FULL BORE

Class	Max. CWP	Test Pressure	Pattern	Connections	Port	Materials		Operation
						Body & Cover	Plug	
300	740 Psi	Shell 1125 Psi Seat 815 Psi	Straight-way Regular	Screwed API 5B table 2.1 or ASME B1.20.1	Rectan-gular Full bore **	Cast Steel ASTM A 216 Grade WCB Cover: EN 10025 S355J0 S355J2G3	Cast Iron ASTM A 126 Class B Steel	Manual

** 1/2" and 3/4" Round port full bore.

	WRENCH TYPE 8 K	GEAR TYPE C
	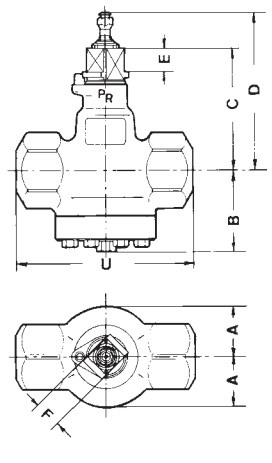	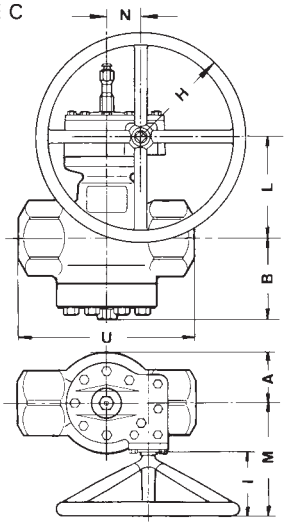
Plug	DN 1/2" - 4"	DN 1/2" - 4"
Cast Iron	5-AR 70044 N	5-AR 70044 C
Steel	5-AR 70047 N	5-AR 70047 C

DN	A	B	C	D	E	F	H	I	L	M	N	U
1/2"	48	83	120	160	24	30	45	16	94	104	32	115
3/4"	48	82	121	161	24	30	45	16	94	104	32	115
1"	40	86	123	163	24	30	45	16	97	104	32	115
1 1/4"	44	97	128	168	24	30	45	16	101	104	32	130
1 1/2"	60	102	144	185	24	30	150	101	137	181	47	150
2"	71	115	171	225	32	36	150	101	155	181	47	165
2 1/2"	83	148	196	252	42	50	150	101	168	181	47	195
3"	92	164	224	285	47	55	150	101	192	195	65	220
4"	114	180	262	327	51	65	150	101	224	195	65	270

STRAIGHTWAY TAPER PLUG VALVES

CAST STEEL CLASS 300
REGULAR PATTERN
RECTANGULAR PORT FULL BORE

Class	Max. CWP	Test Pressure	Pattern	Connections	Port	Materials		Operation
						Body & Cover	Plug	
300	740 Psi	Shell 1125 Psi Seat 815 Psi	Straight-way Regular	Flanges R.F. or R.J. ASME B 16.5 Face to Face ASME B 16.10	Rectan-gular Full Bore **	Cast Steel ASTM A 216 Grade WCB Cover: EN 10025 S355J0 S355J2G3	Cast Iron ASTM A 126 Class B Steel	Manual

** 1/2" and 3/4" Round port full bore.

	WRENCH TYPE 8 K	GEAR TYPE C	GEAR TYPE D
	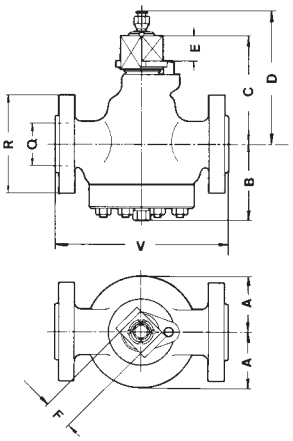	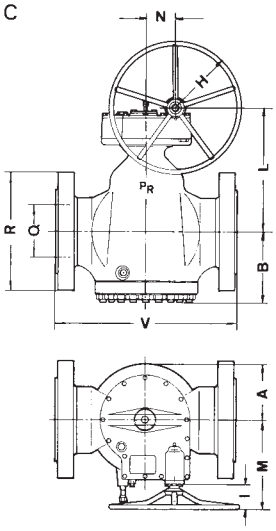	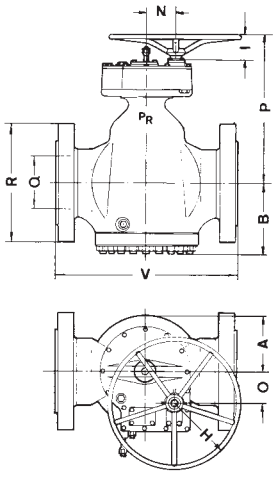
Plug	DN 1/2" - 4"	DN 1/2" - 24"	DN 6" - 24"
Cast Iron	5-AR 70144 N	5-AR 70144 C	5-AR 70144 D
Steel	5-AR 70147 N	5-AR 70147 C	5-AR 70147 D

																Raised Face	Ring Joint
DN	A	B	C	D	E	F	H	I	L	M	N	O	P	Q	R	V	V
1/2"	48	83	120	160	24	30	45	16	94	104	32			*13	95	*140	*151
3/4"	48	82	121	161	24	30	45	16	94	104	32			*19	118	*152	*165
1"	40	86	123	163	24	30	45	16	97	104	32			25	124	*159	*172
1 1/4"	44	97	128	168	24	30	45	16	101	104	32			32	133	*178	*191
1 1/2"	60	102	144	185	24	30	150	101	137	181	47			38	156	*191	*203
2"	71	115	171	225	32	36	150	101	155	181	47			51	165	*216	*232
2 1/2"	83	148	196	239	42	50	150	101	168	181	47			64	191	*241	*257
3"	92	164	224	285	47	55	150	101	192	195	65			76	210	*283	*299
4"	114	180	262	327	51	65	150	101	224	195	65			102	254	*305	*321
6"	145	247					200	101	342	268	85	46	465	152	318	403	419
8"	195	277					300	101	416	293	95	70	540	203	381	502	518
10"	213	314					300	101	492	361	135	69	626	254	445	568	584
12"	285	394					300	101	604	400	160	108	738	305	520	711	727
14"	288	418					350	101	616	423	175	130	750	337	585	762	778
16"	320	445					350	101	676	460	176	168	810	387	650	838	854
18"	370	530					350	101	760	483	196	192	894	432	710	914	930
20"	390	565					450	101	855	568	246	279	989	483	775	991	1010
24"	440	600					450	101	979	660	299	270	1131	585	915	1143	1165

Note: * Not included in the standards.

STRAIGHTWAY TAPER PLUG VALVES

CAST STEEL CLASS 300
REGULAR PATTERN
RECTANGULAR PORT FULL BORE

Class	Max. CWP	Test Pressure	Pattern	Connections	Port	Materials		Operation
						Body & Cover	Plug	
300	740 Psi	Shell 1125 Psi Seat 815 Psi	Straight-way Regular	Welding Ends ASME B 16.25 End to End ASME B 16.10	Rectan-gular Full bore **	Cast Steel ASTM A 216 Grade WCB Cover: EN 10025 S355J0 S355J2G3	Cast Iron ASTM A 126 Class B Steel	Manual

** 1/2" and 3/4" Round port full bore.

	WRENCH TYPE 8 K	GEAR TYPE C	GEAR TYPE D
	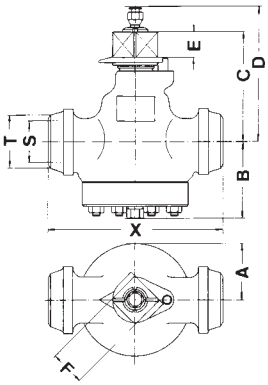	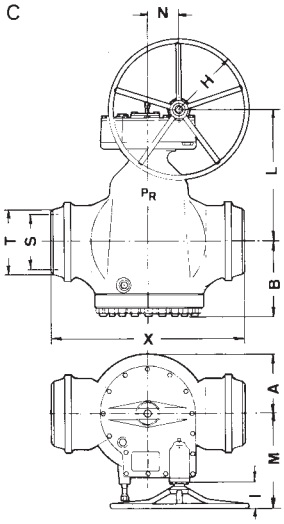	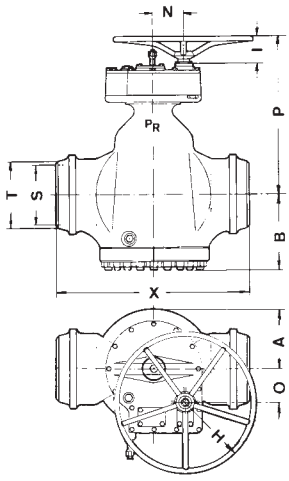
Plug	DN 1/2" - 4"	DN 1/2" - 24"	DN 6" - 24"
Cast Iron	5-AR 70544 N	5-AR 70544 C	5-AR 70544 D
Steel	5-AR 70547 N	5-AR 70547 C	5-AR 70547 D

DN	A	B	C	D	E	F	H	I	L	M	N	O	P	S	T	X
1/2"	48	83	120	160	24	30	45	16	94	104	32			Inside pipe dimension to be specified by purchaser.	*23,3	*140
3/4"	48	82	121	161	24	30	45	16	94	104	32				*28,7	*149
1"	40	86	123	163	24	30	45	16	97	104	32				*35,4	*172
1 1/4"	44	97	128	168	24	30	45	16	101	104	32				*44,2	*200
1 1/2"	60	102	144	185	24	30	150	101	137	181	47				*50,3	*241
2"	71	115	171	225	32	36	150	101	155	181	47				*62,3	*267
2 1/2"	83	148	196	252	42	50	150	101	168	181	47				75	*305
3"	92	164	224	285	47	55	150	101	192	195	65				91	*330
4"	114	180	262	327	51	65	150	101	224	195	65				117	*356
6"	145	247					200	101	342	268	85	46	465		172	*457
8"	195	277					300	101	416	293	95	70	540		223	*521
10"	213	314					300	101	492	361	135	69	626		278	*559
12"	285	394					300	101	604	400	160	108	738		329	*635
14"	288	418					350	101	616	423	175	130	750		362	*762
16"	320	445					350	101	676	460	176	168	810		413	*838
18"	370	530					350	101	760	483	196	192	894		464	*914
20"	390	565					450	101	855	568	246	279	989		516	*991
24"	440	600					450	101	979	660	299	270	1131		619	*1143

Note: * Not included in the standards.

STRAIGHTWAY TAPER PLUG VALVES

CAST STEEL CLASS 300
REGULAR PATTERN
RECTANGULAR PORT

Class	Max. CWP	Test Pressure	Pattern	Connections	Port	Materials		Operation
						Body & Cover	Plug	
300	740 Psi	Shell 1125 Psi Seat 815 Psi	Straight-way Regular	Screwed API 5B table 2.1 or ASME B1.20.1	Rectan-gular	Cast Steel ASTM A 216 Grade WCB Cover: EN 10025 S355J0 S355J2G3	Cast Iron ASTM A 126 Class B Steel	Manual

	WRENCH TYPE 8 K	GEAR TYPE C
	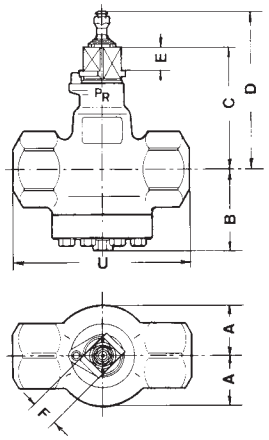	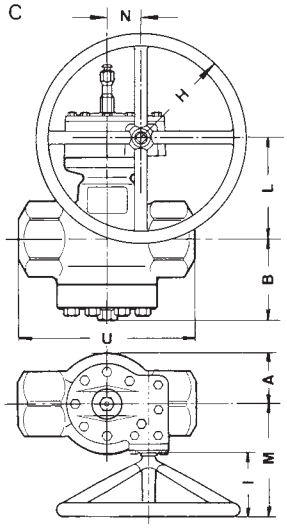
Plug	DN 1 1/2" - 4"	DN 1 1/2" - 4"
Cast Iron	5-AV 70044 N	5-AV 70044 C
Steel	5-AV 70047 N	5-AV 70047 C

DN	A	B	C	D	E	F	H	I	L	M	N	U
1 1/2"	44	97	128	167	24	30	45	16	101	104	32	150
2"	60	102	144	188	24	30	150	101	137	181	47	165
2 1/2"	76	115	171	224	32	36	150	101	155	181	47	195
3"	83	148	196	252	42	50	150	101	168	181	47	220
4"	98	160	211	265	42	50	150	101	181	195	65	270

STRAIGHTWAY TAPER PLUG VALVES

CAST STEEL CLASS 300
REGULAR PATTERN
RECTANGULAR PORT

Class	Max. CWP	Test Pressure	Pattern	Connections	Port	Materials		Operation
						Body & Cover	Plug	
300	740 Psi	Shell 1125 Psi Seat 815 Psi	Straight-way Regular	Flanges R.F. or R.J. ASME B 16.5 Face to Face ASME B 16.10	Rectan-gular	Cast Steel ASTM A 216 Grade WCB Cover: EN 100254 S355 J0 S355 J2G3	Cast Iron ASTM A 126 Class B Steel	Manual

	WRENCH TYPE 8 K	GEAR TYPE C	GEAR TYPE D
	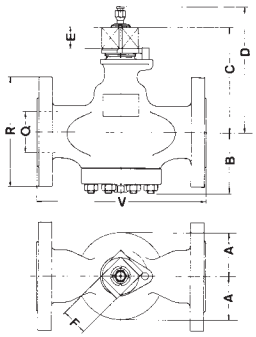	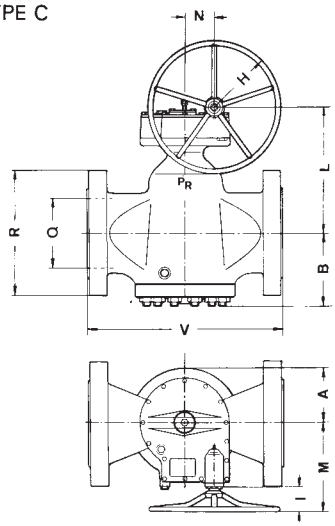	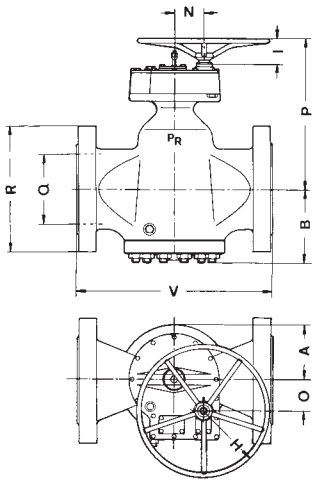
Plug	DN 1 1/2" - 6"	DN 1 1/2" - 24"	DN 6" - 24"
Cast Iron	5-AV 70144 N	5-AV 70144 C	5-AV 70144 D
Steel	5-AV 70147 N	5-AV 70147 C	5-AV 70147 D

																	Raised Face	Ring Joint
DN	A	B	C	D	E	F	H	I	L	M	N	O	P	Q	R		V	V
1 1/2"	44	97	128	167	24	30	45	16	101	104	32			38	156		*191	*203
2"	60	102	148	188	24	30	150	101	137	181	47			51	165		*216	*232
2 1/2"	76	115	171	224	32	36	150	101	155	181	47			64	191		*241	*257
3"	83	148	196	252	42	50	150	101	168	181	47			76	210		*283	*298
4"	98	160	211	265	42	50	150	101	181	195	65			102	254		*305	*321
6"	136	183	294	357	51	65	200	101	315	268	85	46	438	152	318		403	419
8"	151	249					200	101	358	268	85	46	481	203	381		502	517
10"	196	265					300	101	395	293	95	70	519	254	445		568	584
12"	233	299					300	101	500	293	95	70	624	305	521		711	727
14"	264	361					300	101	570	361	135	69	704	337	584		762	778
16"	289	416					300	101	626	400	160	108	760	387	648		838	854
18"	305	440					350	101	642	423	175	130	776	432	711		914	930
20"	338	468					350	101	697	460	176	168	831	483	775		991	1010
24"	414	608					350	101	878	483	196	192	1012	584	914		1143	1165

Note: * Not included in the standards.

STRAIGHTWAY TAPER PLUG VALVES

CAST STEEL CLASS 300
REGULAR PATTERN
RECTANGULAR PORT

Class	Max. CWP	Test Pressure	Pattern	Connections	Port	Materials		Operation
						Body & Cover	Plug	
300	740 Psi	Shell 1125 Psi Seat 815 Psi	Straight-way Regular	Welding Ends ASME B 16.25 End to End ASME B 16.10	Rectan-gular	Cast Steel ASTM A 216 Grade WCB Cover: EN 10025 S355J0 S355J2G3	Cast Iron ASTM A 126 Class B Steel	Manual

	WRENCH TYPE 8 K	GEAR TYPE C	GEAR TYPE D
	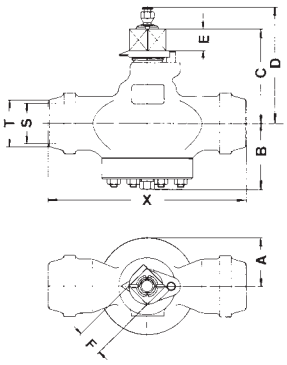	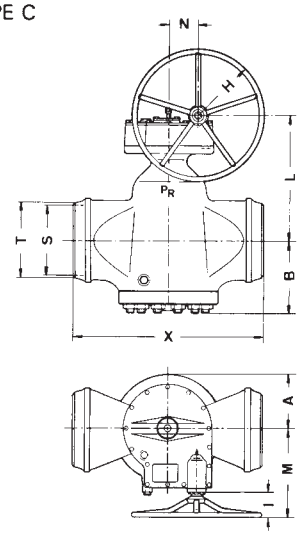	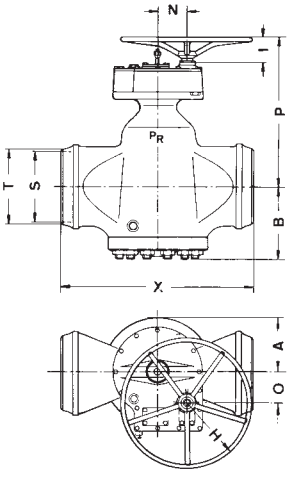
Plug	DN 1 1/2" - 6"	DN 1 1/2" - 24"	DN 6" - 24"
Cast Iron	5-AV 70544 N	5-AV 70544 C	5-AV 70544 D
Steel	5-AV 70547 N	5-AV 70547 C	5-AV 70547 D

DN	A	B	C	D	E	F	H	I	L	M	N	O	P	S	T	X
1 1/2"	44	97	128	167	24	30	45	16	101	104	32			Inside pipe dimension to be specified by purchaser	*50,3	*241
2"	60	102	148	188	24	30	150	101	137	181	47				*62,3	*267
2 1/2"	76	115	171	224	32	36	150	101	155	181	47				75	*305
3"	83	148	196	252	42	50	150	101	168	181	47				91	*330
4"	98	160	211	265	42	50	150	101	181	195	65				117	*356
6"	136	183	294	357	51	65	200	101	315	268	85	46	438		172	*457
8"	151	249					200	101	358	268	85	46	481		223	*521
10"	196	265					300	101	395	293	95	70	519		278	*559
12"	233	299					300	101	500	293	95	70	624		329	*635
14"	264	361					300	101	570	361	135	69	704		362	*762
16"	289	416					300	101	626	400	160	108	760		413	*838
18"	305	440					350	101	642	423	175	130	776		464	*914
20"	338	468					350	101	697	460	176	168	831		516	*991
24"	414	608					350	101	878	483	196	192	1012		619	*1143

Note: * Not included in the standards.

STRAIGHTWAY TAPER PLUG VALVES

CAST STEEL CLASS 300
VENTURI PATTERN
RECTANGULAR PORT

Class	Max. CWP	Test Pressure	Pattern	Connections	Port	Materials		Operation
						Body & Cover	Plug	
300	740 Psi	Shell 1125 Psi Seat 815 Psi	Straight-way Venturi	Flanges R.F. or R.J. ASME B 16.5 Face to Face ASME B 16.10	Rectan-gular	Cast Steel ASTM A 216 Grade WCB Cover: EN 10025 S355J0 S355J2G3	Cast Iron ASTM A 126 Class B Steel	Manual

	WRENCH TYPE 8 K	GEAR TYPE C	GEAR TYPE D
	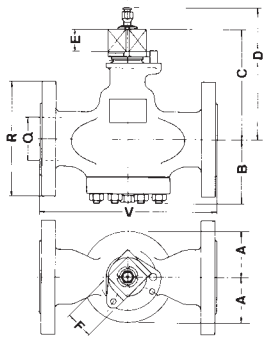	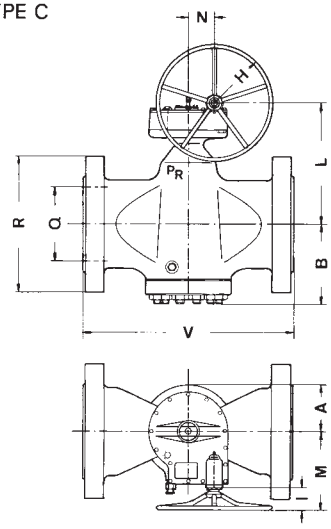	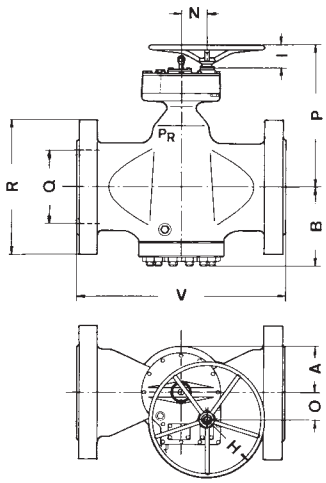
Plug	DN 1 1/2" - 4"	DN 1 1/2" - 36"	DN 8" - 36"
Cast Iron	5-AT 70144 N	5-AT 70144 C	5-AT 70144 D
Steel	5-AT 70147 N	5-AT 70147 C	5-AT 70147 D

																	Raised Face	Ring Joint
DN	A	B	C	D	E	F	H	I	L	M	N	O	P	Q	R	V	V	
1 1/2"	44	97	128	160	24	30	45	16	101	104	32			38	155	*191	*203	
2"	60	102	144	176	24	30	150	101	137	181	47			51	165	216	232	
2 1/2"	71	115	171	214	32	36	150	101	155	181	47			64	191	241	257	
3"	69	119	192	248	42	50	150	101	163	181	47			76	210	283	299	
4"	98	160	211	265	42	50	150	101	181	195	65			102	254	305	321	
6"	106	179					150	101	222	195	71			152	318	403	419	
8"	145	232					200	101	338	268	85	46	461	203	381	419	435	
10"	146	245					200	101	370	268	85	46	493	254	445	457	473	
12"	170	270					300	101	406	293	95	70	530	305	521	502	518	
14"	174	313					300	101	430	293	95	70	554	337	584	762	778	
16"	193	347					300	101	520	361	135	69	654	387	648	838	854	
18"	220	340					300	101	590	400	160	108	724	432	711	914	930	
20"	245	385					300	101	617	400	160	108	751	483	775	991	1010	
24"	280	460					350	101	700	423	175	130	834	584	914	1143	1165	
30"	350	590					350	101	827	483	196	192	965	*737	*1092	1397	1422	
36"	425	625					350	101	839	501	200	210	973	*889	*1270	1727	1756	

Note: * Not included in the standards.

STRAIGHTWAY TAPER PLUG VALVES

CAST STEEL CLASS 300
VENTURI PATTERN
RECTANGULAR PORT

Class	Max. CWP	Test Pressure	Pattern	Connections	Port	Materials		Operation
						Body & Cover	Plug	
300	740 Psi	Shell 1125 Psi Seat 815 Psi	Straight-way Venturi	Welding Ends ASME B 16.25 End to End ASME B 16.10	Rectan-gular	Cast Steel ASTM A 216 Grade WCB Cover: EN 10025 S355J0 S355J2G3	Cast Iron ASTM A 126 Class B Steel	Manual

	WRENCH TYPE 8 K	GEAR TYPE C	GEAR TYPE D
	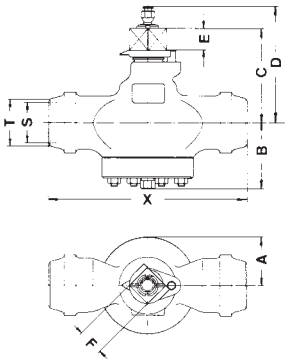	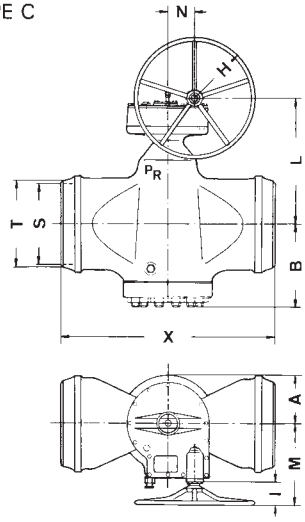	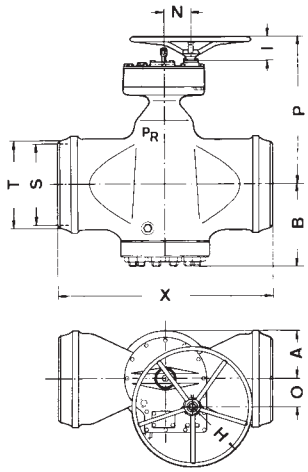
Plug	DN 1 1/2" - 4"	DN 1 1/2" - 36"	DN 8" - 36"
Cast Iron	5-AT 70544 N	5-AT 70544 C	5-AT 70544 D
Steel	5-AT 70547 N	5-AT 70547 C	5-AT 70547 D

DN	A	B	C	D	E	F	H	I	L	M	N	O	P	S	T	X
1 1/2"	44	97	128	160	24	30	45	16	101	104	32			Inside pipe dimension to be specified by purchaser.	*50,3	*241
2"	60	102	144	176	24	30	150	101	137	181	47				*62,3	*267
2 1/2"	71	115	171	214	32	36	150	101	155	181	47				75	*305
3"	69	119	192	248	42	50	150	101	163	181	47				91	*330
4"	98	160	211	265	42	50	150	101	181	195	65				117	*356
6"	106	179					150	101	222	195	71				172	457
8"	145	232					200	101	338	268	85	46	461		223	521
10"	146	245					200	101	370	268	85	46	493		278	559
12"	170	270					300	101	406	293	95	70	530		329	635
14"	174	313					300	101	430	293	95	70	554		362	762
16"	193	347					300	101	520	361	135	69	654		413	838
18"	220	340					300	101	590	400	160	108	724		464	914
20"	245	385					300	101	617	400	160	108	751		516	991
24"	280	460					350	101	700	423	175	130	834		619	1143
30"	350	590					350	101	827	483	196	192	965		772	1397
36"	425	625					350	101	839	501	200	210	973		927	1727

Note: * Not included in the standards.

STRAIGHTWAY TAPER PLUG VALVES

CAST STEEL CLASS 600
REGULAR PATTERN
RECTANGULAR PORT FULL BORE

Class	Max. CWP	Test Pressure	Pattern	Connections	Port	Materials		Operation
						Body & Cover	Plug	
600	1480 Psi	Shell 2225 Psi Seat 1630 Psi	Straight-way Regular	Screwed API 5B table 2.1 or ASME B1.20.1	Rectan-gular Full bore **	Cast Steel ASTM A 216 Grade WCB Cover: EN 10025 S355J0 S355J2G3	Cast Iron ASTM A 126 Class B	Manual
							Steel	

** 1/2" and 3/4" Round port full bore.

	WRENCH TYPE 8 L	GEAR TYPE C
	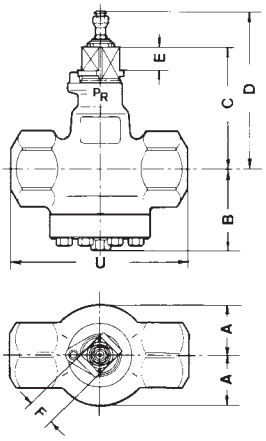	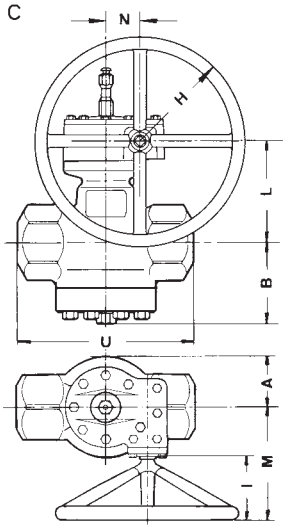
Plug	DN 1/2" - 4"	DN 1/2" - 4"
Cast Iron	5-AR 70064 N	5-AR 70064 C
Steel	5-AR 70067 N	5-AR 70067 C

DN	A	B	C	D	E	F	H	I	L	M	N	U
1/2"	48	95	120	159	24	30	150	101	112	181	47	116
3/4"	48	94	121	160	24	30	150	101	112	181	47	116
1"	49	98	124	163	24	30	150	101	115	181	47	149
1 1/4"	56	102	128	167	24	30	150	101	120	181	47	160
1 1/2"	60	105	145	185	24	30	150	101	136	181	47	175
2"	73	128	172	225	32	36	150	101	155	195	65	190
2 1/2"	86	151	198	252	42	50	150	101	168	195	71	210
3"	92	166	225	285	47	55	150	101	192	195	71	284
4"	117	181	265	327	51	65	200	101	289	268	85	326

STRAIGHTWAY TAPER PLUG VALVES

CAST STEEL CLASS 600
REGULAR PATTERN
RECTANGULAR PORT FULL BORE

Class	Max. CWP	Test Pressure	Pattern	Connections	Port	Materials		Operation
						Body & Cover	Plug	
600	1480 Psi	Shell 2225 Psi Seat 1630 Psi	Straight-way Regular	Flanges R.F. or R.J. ASME B 16.5 Face to Face ASME B 16.10	Rectan-gular Full bore **	Cast Steel ASTM A 216 Grade WCB Cover: EN 10025 S355J0 S355J2G3	Cast Iron ASTM A 126 Class B	Manual
							Steel	

**DN 1/2" and 3/4" Round port full bore.

	WRENCH TYPE 8 L	GEAR TYPE C	GEAR TYPE D
Plug	DN 1/2" - 4"	DN 1/2" - 20"	DN 4" - 20"
Cast Iron	5-AR 70164 N	5-AR 70164 C	5-AR 70164 D
Steel	5-AR 70167 N	5-AR 70167 C	5-AR 70167 D

DN	A	B	C	D	E	F	H	I	L	M	N	O	P	Q	R	Raised Face V	Ring Joint V
1/2"	48	95	120	159	24	30	150	101	112	181	47			13	95	*165	*165
3/4"	48	94	121	160	24	30	150	101	112	181	47			19	118	*191	*191
1"	49	98	124	163	24	30	150	101	115	181	47			25	124	216	216
1 1/4"	56	102	128	167	24	30	150	101	120	181	47			32	133	229	229
1 1/2"	60	105	145	185	24	30	150	101	136	181	47			38	156	241	241
2"	73	128	172	225	32	36	150	101	155	195	65			51	165	292	295
2 1/2"	86	151	198	252	42	50	150	101	168	195	71			64	191	330	333
3"	92	166	225	285	47	55	150	101	192	195	71			76	210	356	359
4"	117	181	265	327	51	65	200	101	289	268	85	46	412	102	273	432	435
6"	158	255					300	101	364	293	95	70	488	152	356	559	562
8"	212	312					300	101	461	361	135	69	595	200	419	660	664
10"	248	324					300	101	545	400	160	108	679	248	508	787	791
12"	308	426					350	101	604	423	175	130	738	299	559	838	841
14"	316	460					350	101	656	460	176	168	790	327	603	889	892
16"	370	515					450	101	709	501	200	210	843	375	686	991	994
18"	410	570					450	101	804	568	246	279	938	419	743	*1092	*1095
20"	433	655					450	101	949	660	299	270	1101	464	813	*1194	*1200

Note: * Not included in the standards.

STRAIGHTWAY TAPER PLUG VALVES

CAST STEEL CLASS 600
REGULAR PATTERN
RECTANGULAR PORT FULL BORE

Class	Max. CWP	Test Pressure	Pattern	Connections	Port	Materials		Operation
						Body & Cover	Plug	
600	1480 Psi	Shell 2225 Psi Seat 1630 Psi	Straight-way Regular	Welding Ends ASME B 16.25 End to End ASME B 16.10	Rectan-gular Full bore **	Cast Steel ASTM A 216 Grade WCB Cover: EN 10025 S355J0 S355J2G3	Cast Iron ASTM A 126 Class B Steel	Manual

** 1/2" and 3/4" Round port full bore.

	WRENCH TYPE 8 L	GEAR TYPE C	GEAR TYPE D
	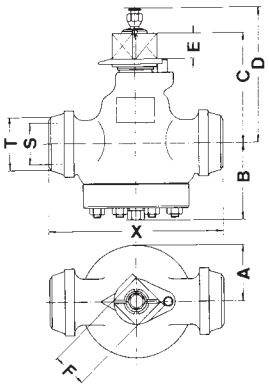	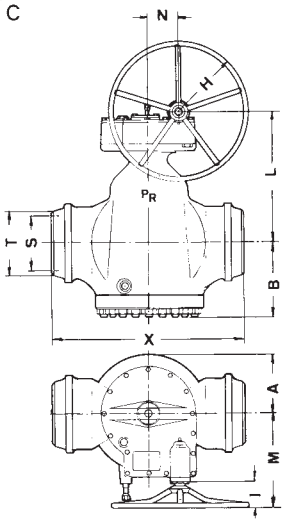	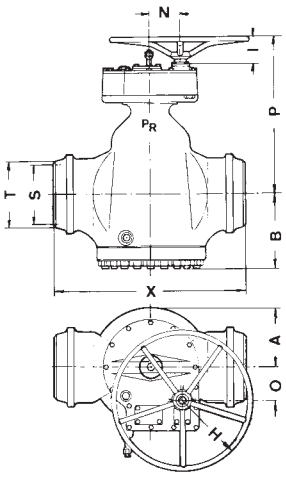
Plug	DN 1/2" - 4"	DN 1/2" - 20"	DN 4" - 20"
Cast Iron	5-AR 70564 N	5-AR 70564 C	5-AR 70564 D
Steel	5-AR 70567 N	5-AR 70567 C	5-AR 70567 D

DN	A	B	C	D	E	F	H	I	L	M	N	O	P	S	T	X
1/2"	48	95	120	159	24	30	150	101	112	181	47			Inside pipe dimension to be specified by purchaser •	*23,3	*165
3/4"	48	94	121	160	24	30	150	101	112	181	47				*28,7	*191
1"	49	98	124	163	24	30	150	101	115	181	47				*35,4	216
1 1/4"	56	102	128	167	24	30	150	101	120	181	47				*44,2	229
1 1/2"	60	105	145	185	24	30	150	101	136	181	47				*50,3	241
2"	73	128	172	225	32	36	150	101	155	195	65				*62,3	292
2 1/2"	86	151	198	252	42	50	150	101	168	195	71				75	330
3"	92	166	225	285	47	55	150	101	192	195	71				91	356
4"	117	181	265	327	51	65	200	101	289	268	85	46	412		117	432
6"	158	255					300	101	364	293	95	70	488		172	559
8"	212	312					300	101	461	361	135	69	595		223	660
10"	248	324					300	101	545	400	160	108	679		278	787
12"	308	426					350	101	604	423	175	130	738		329	838
14"	316	460					350	101	656	460	176	168	790		362	889
16"	370	515					450	101	709	501	200	210	843		413	991
18"	410	570					450	101	804	568	246	279	938		464	*1092
20"	433	655					450	101	949	660	299	270	1101		516	*1194

Note: * Not included in the standards.

STRAIGHTWAY TAPER PLUG VALVES

CAST STEEL CLASS 600
REGULAR PATTERN
RECTANGULAR PORT

Class	Max. CWP	Test Pressure	Pattern	Connections	Port	Materials		Operation
						Body & Cover	Plug	
600	1480 Psi	Shell 2225 Psi Seat 1630 Psi	Straight-way Regular	Flanges R.F. or R.J. ASME B 16.5 Face to Face ASME B 16.10	Rectan-gular	Cast Steel ASTM A 216 Grade WCB Cover: EN 10025 S355J0 S355J2G3	Cast Iron ASTM A 126 Class B Steel	Manual

	WRENCH TYPE 8 L	GEAR TYPE C	GEAR TYPE D
	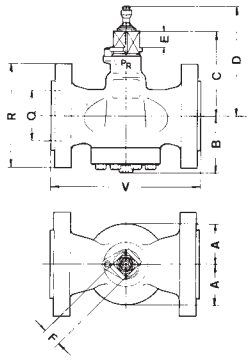	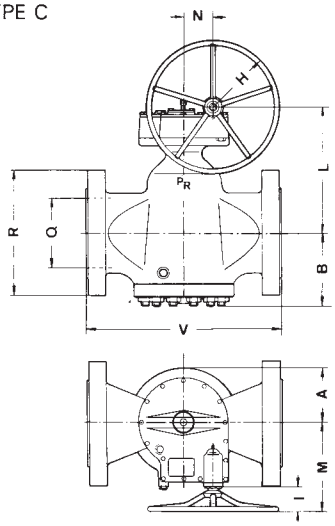	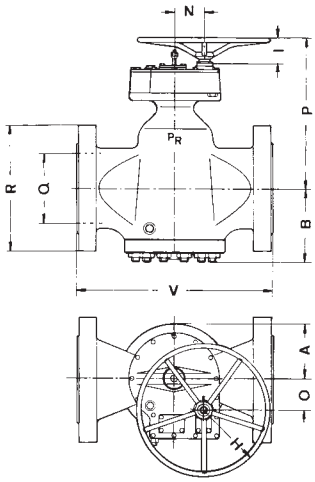
Plug	DN 1 1/2" - 4"	DN 1 1/2" - 24"	DN 6" - 24"
Cast Iron	5-AV 70164 N	5-AV 70164 C	5-AV 70164 D
Steel	5-AV 70167 N	5-AV 70167 C	5-AV 70167 D

																Raised Face	Ring Joint
DN	A	B	C	D	E	F	H	I	L	M	N	O	P	Q	R	V	V
1 1/2"	56	102	128	160	24	30	150	101	120	181	47			38	156	241	241
2"	63	106	148	188	24	30	150	101	140	181	47			51	165	292	295
2 1/2"	78	128	172	215	32	36	150	101	155	195	65			64	191	330	333
3"	86	151	198	252	42	50	150	101	168	195	71			76	210	356	359
4"	106	166	225	285	47	55	150	101	192	195	71			102	273	432	435
6"	145	212					200	101	326	268	85	46	445	152	356	559	562
8"	164	272					300	101	376	293	95	70	500	200	419	660	664
10"	212	312					300	101	461	361	135	69	595	248	508	787	791
12"	248	324					300	101	545	400	160	108	679	299	559	838	841
14"	254	366					300	101	567	400	160	108	701	327	603	889	892
16"	313	448					350	101	626	423	175	130	760	375	686	991	994
18"	325	482					350	101	678	460	176	168	812	419	743	*1092	*1095
20"	365	537					450	101	731	501	200	210	865	464	813	*1194	*1200
24"	433	655					450	101	844	568	246	279	978	559	940	*1397	*1407

STRAIGHTWAY TAPER PLUG VALVES

CAST STEEL CLASS 600
REGULAR PATTERN
RECTANGULAR PORT

Class	Max. CWP	Test Pressure	Pattern	Connections	Port	Materials		Operation
						Body & Cover	Plug	
600	1480 Psi	Shell 2225 Psi Seat 1630 Psi	Straight-way Regular	Welding Ends ASME B 16.25 End to End ASME B 16.10	Rectan-gular	Cast Steel ASTM A 216 Grade WCB Cover: EN 10025 S355J0 S355J2G3	Cast Iron ASTM A 126 Class B Steel	Manual

	WRENCH TYPE 8 L	GEAR TYPE C	GEAR TYPE D
	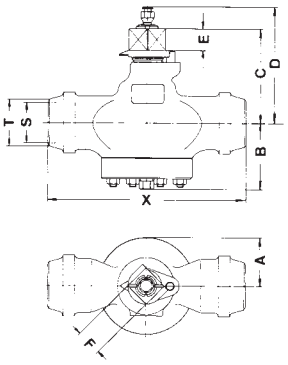	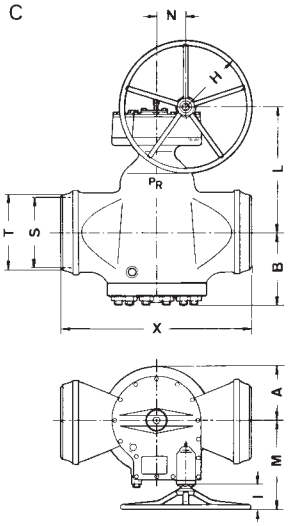	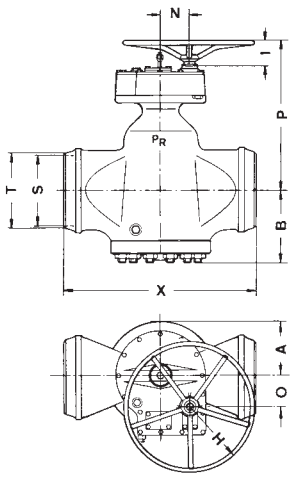
Plug	DN 1 1/2" - 4"	DN 1 1/2" - 24"	DN 6" - 24"
Cast Iron	5-AV 70564 N	5-AV 70564 C	5-AV 70564 D
Steel	5-AV 70567 N	5-AV 70567 C	5-AV 70567 D

DN	A	B	C	D	E	F	H	I	L	M	N	O	P	S	T	X
1 1/2"	56	102	128	160	24	30	150	101	120	181	47			Inside pipe dimension to be specified by purchaser.	*50,3	241
2"	63	106	148	188	24	30	150	101	140	181	47				*62,3	292
2 1/2"	78	128	172	215	32	36	150	101	155	195	65				75	330
3"	86	151	198	252	42	50	150	101	168	195	71				91	356
4"	106	166	225	285	47	55	150	101	192	195	71				117	432
6"	145	212					200	101	326	268	85	46	445		172	559
8"	164	272					300	101	376	293	95	70	500		223	660
10"	212	312					300	101	461	361	135	69	595		278	787
12"	248	324					300	101	545	400	160	108	679		329	838
14"	254	366					300	101	567	400	160	108	701		362	889
16"	313	448					350	101	626	423	175	130	760		413	991
18"	325	482					350	101	678	460	176	168	812		464	*1092
20"	365	537					450	101	731	501	200	210	865		516	*1194
24"	433	655					450	101	844	568	246	279	978		619	*1397

Note: * Not included in the standards.

STRAIGHTWAY TAPER PLUG VALVES

CAST STEEL CLASS 600
VENTURI PATTERN
RECTANGULAR PORT

Class	Max. CWP	Test Pressure	Pattern	Connections	Port	Materials		Operation
						Body & Cover	Plug	
600	1480 Psi	Shell 2225 Psi Seat 1630 Psi	Straight-way Venturi	Flanges R.F. or R.J. ASME B 16.5 Face to Face ASME B 16.10	Rectan-gular	Cast Steel ASTM A 216 Grade WCB Cover: EN 10025 S355J0 S355J2G3	Cast Iron ASTM A 126 Class B	Manual
							Steel	

	WRENCH TYPE 8 L	GEAR TYPE C	GEAR TYPE D
	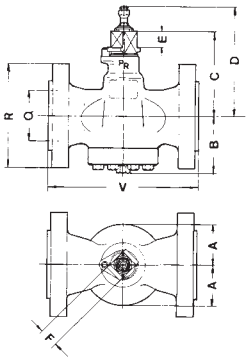	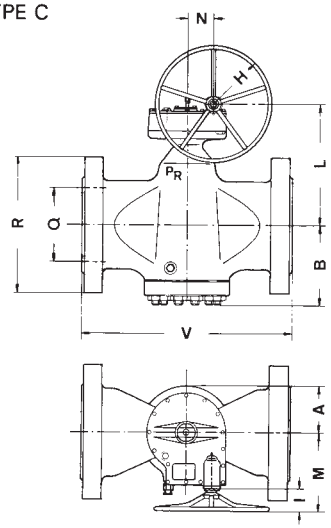	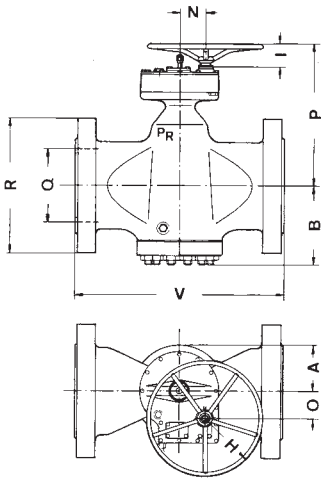
Plug	DN 1 1/2" - 4"	DN 1 1/2" - 36"	DN 6" - 36"
Cast Iron	5-AT 70164 N	5-AT 70164 C	5-AT 70164 D
Steel	5-AT 70167 N	5-AT 70167 C	5-AT 70167 D

DN	A	B	C	D	E	F	H	I	L	M	N	O	P	Q	R	Raised Face V	Ring Joint V
1 1/2"	56	102	128	160	24	30	150	101	120	181	47			38	156	241	241
2"	60	105	145	177	24	30	150	101	136	181	47			51	165	292	295
2 1/2"	73	128	172	215	32	36	150	101	155	195	65			64	191	330	333
3"	86	151	198	252	42	50	150	101	168	195	71			76	210	356	359
4"	92	166	225	275	47	55	150	101	192	195	71			102	273	432	435
6"	114	189					200	101	297	268	85	46	420	152	356	559	562
8"	145	230					200	101	338	268	85	46	461	200	419	660	664
10"	157	275					300	101	387	293	95	70	511	248	508	787	791
12"	184	310					300	101	480	361	135	69	614	299	559	838	841
14"	192	333					300	101	495	361	135	69	629	327	603	889	892
16"	223	369					300	101	571	400	160	108	705	375	686	991	994
18"	238	392					300	101	597	400	160	108	731	419	743	1092	1095
20"	273	451					350	101	638	423	175	130	772	464	813	1194	1200
24"	310	515					350	101	760	460	176	168	894	559	940	1397	1407
30"	330	590					450	101	830	501	200	210	964	695	*1130	1651	1664
36"	385	700					450	101	935	568	246	279	1069	840	*1315	2083	2099

Note: * Not included in the standards.

STRAIGHTWAY TAPER PLUG VALVES

CAST STEEL CLASS 600
VENTURI PATTERN
RECTANGULAR PORT

Class	Max. CWP	Test Pressure	Pattern	Connections	Port	Materials		Operation
						Body & Cover	Plug	
600	1480 Psi	Shell 2225 Psi Seat 1630 Psi	Straight-way Venturi	Welding Ends ASME B 16.25 End to End ASME B 16.10	Rectan-gular	Cast Steel ASTM A 216 Grade WCB Cover: EN 10025 S355J0 S355J2G3	Cast Iron ASTM A 126 Class B Steel	Manual

	WRENCH TYPE 8 L	GEAR TYPE C	GEAR TYPE D
	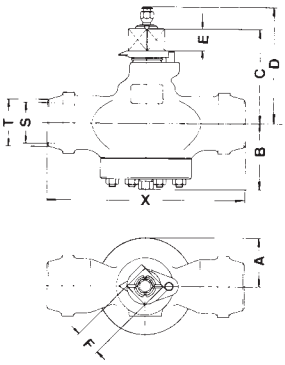	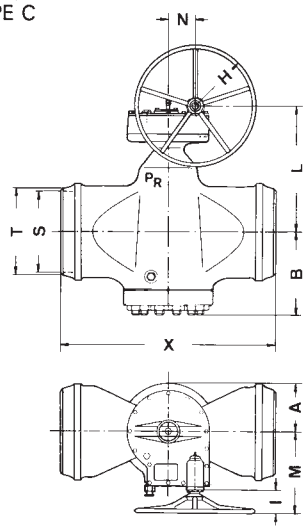	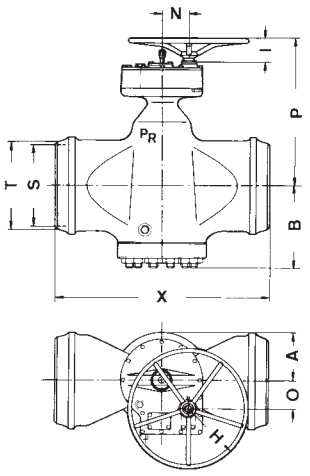
Plug	DN 1 1/2" - 4"	DN 1 1/2" - 36"	DN 6" - 36"
Cast Iron	5-AT 70564 N	5-AT 70564 C	5-AT 70564 D
Steel	5-AT 70567 N	5-AT 70567 C	5-AT 70567 D

DN	A	B	C	D	E	F	H	I	L	M	N	O	P	S	T	X
1 1/2"	56	102	128	160	24	30	150	101	120	181	47			Inside pipe dimension to be specified by purchaser.	*50,3	241
2"	60	105	145	177	24	30	150	101	136	181	47				*62,3	292
2 1/2"	73	128	172	215	32	36	150	101	155	195	65				75	330
3"	86	151	198	252	42	50	150	101	168	195	71				91	356
4"	92	166	225	275	47	55	150	101	192	195	71				117	432
6"	114	189					200	101	297	268	85	46	420		172	559
8"	145	230					200	101	338	268	85	46	461		223	660
10"	157	275					300	101	387	293	95	70	511		278	787
12"	184	310					300	101	480	361	135	69	614		329	838
14"	192	333					300	101	495	361	135	69	629		362	889
16"	223	369					300	101	571	400	160	108	705		413	991
18"	238	392					300	101	597	400	160	108	731		464	1092
20"	273	451					350	101	638	423	175	130	772		516	1194
24"	310	515					350	101	760	460	176	168	894		619	1397
30"	330	540					450	101	830	501	200	210	964		772	1651
36"	385	700					450	101	935	568	246	279	1069		927	2083

Note: * Not included in the standards.

STRAIGHTWAY TAPER PLUG VALVES

CAST STEEL CLASS 900
REGULAR PATTERN
RECTANGULAR PORT FULL BORE

Class	Max. CWP	Test Pressure	Pattern	Connections	Port	Materials		Operation
						Body & Cover	Plug	
900	2220 Psi	Shell 3350 Psi Seat 2442 Psi	Straight-way Regular	Screwed API 5B table 2.1 or ASME B1.20.1	Rectan-gular Full bore **	Cast Steel ASTM A 216 Grade WCB Cover: EN 10025 S355J0 S355J2G3	Cast Iron ASTM A 126 Class B Steel	Manual

** 1/2", 3/4" and 1 1/4" Round port full bore.

WRENCH
TYPE 8 L

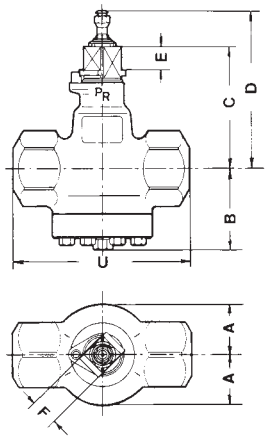

GEAR
TYPE C

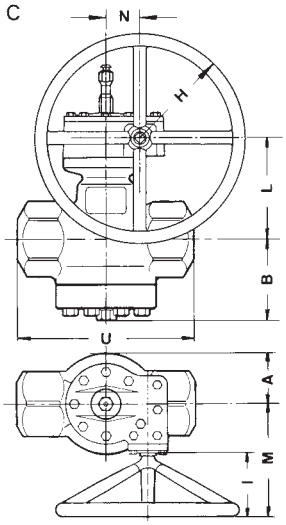

Plug	DN 1/2" - 3"	DN 1/2" - 4"
Cast Iron	5-AR 70074 N	5-AR 70074 C
Steel	5-AR 70077 N	5-AR 70077 C

DN	A	B	C	D	E	F	H	I	L	M	N	U
1/2"	48	95	120	159	24	30	150	101	112	181	47	116
3/4"	48	94	121	160	24	30	150	101	113	181	47	116
1"	49	98	124	163	24	30	150	101	115	181	47	149
1 1/4"	64	104	130	169	24	30	150	101	121	181	47	160
1 1/2"	64	115	145	185	24	30	150	101	136	181	47	181
2"	85	149	186	241	42	50	150	101	157	195	71	216
2 1/2"	85	169	202	256	42	50	150	101	172	195	71	251
3"	100	173	225	285	47	55	200	101	257	268	85	284
4"	125	199	271	334	51	65	200	101	295	268	85	326

STRAIGHTWAY TAPER PLUG VALVES

CAST STEEL CLASS 900
REGULAR PATTERN
RECTANGULAR PORT FULL BORE

Class	Max. CWP	Test Pressure	Pattern	Connections	Port	Materials		Operation
						Body & Cover	Plug	
900	2220 Psi	Shell 3350 Psi Seat 2442 Psi	Straight-way Regular	Flanges R.F. or R.J. ASME B 16.5 Face to Face ASME B 16.10	Rectan-gular Full bore **	Cast Steel ASTM A 216 Grade WCB Cover: EN 10025 S355J0 S355J2G3	Cast Iron ASTM A 126 Class B Steel	Manual

** 1/2", 3/4" and 1 1/4" Round port full bore.

	WRENCH TYPE 8 L	GEAR TYPE C	GEAR TYPE D
	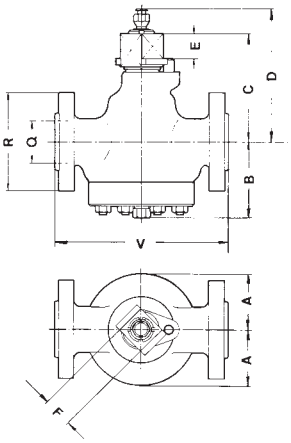	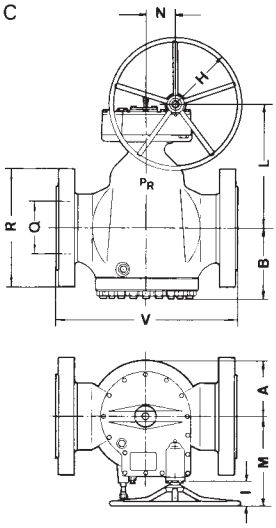	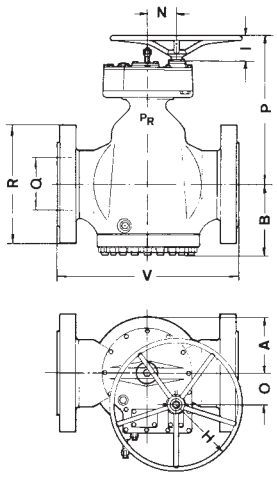
Plug	DN 1/2" - 3"	DN 1/2" - 20"	DN 3" - 20"
Cast Iron	5-AR 70174 N	5-AR 70174 C	5-AR 70174 D
Steel	5-AR 70177 N	5-AR 70177 C	5-AR 70177 D

																Raised Face	Ring Joint
DN	A	B	C	D	E	F	H	I	L	M	N	O	P	Q	R	V	V
1/2"	48	95	120	159	24	30	150	101	112	181	47			13	121	*216	*216
3/4"	48	94	121	160	24	30	150	101	113	181	47			17	130	*229	*229
1"	49	98	124	163	24	30	150	101	115	181	47			22	149	254	254
1 1/4"	64	104	130	169	24	30	150	101	121	181	47			29	159	279	279
1 1/2"	64	115	145	185	24	30	150	101	136	181	47			35	178	305	305
2"	85	149	186	241	42	50	150	101	157	195	71			48	216	368	371
2 1/2"	95	169	202	256	42	50	150	101	172	195	71			57	245	419	422
3"	100	173	225	285	47	55	200	101	257	268	85	46	381	73	241	381	384
4"	125	199	271	334	51	65	200	101	295	268	85	46	419	98	292	*457	*460
6"	158	271					300	101	358	293	95	70	482	146	381	610	613
8"	200	314					300	101	462	400	160	108	596	191	470	737	740
10"	250	353					350	101	546	423	175	130	680	238	546	838	841
12"	302	425					350	101	609	460	176	168	743	283	610	965	968
14"	316	470					450	101	660	501	200	210	792	311	641	*1029	*1038
16"	370	530					450	101	711	568	246	279	845	356	705	*1130	*1140
18"	410	590					450	101	899	660	299	270	1051	400	787	*1219	*1232
20"	460	640					550	111	1099	725	311	297	1259	445	857	*1321	*1334

Note: * Not included in the standards.

STRAIGHTWAY TAPER PLUG VALVES

CAST STEEL CLASS 900
REGULAR PATTERN
RECTANGULAR PORT FULL BORE

Class	Max. CWP	Test Pressure	Pattern	Connections	Port	Materials		Operation
						Body & Cover	Plug	
900	2220 Psi	Shell 3350 Psi Seat 2442 Psi	Straight-way Regular	Welding Ends ASME B 16.25 End to End ASME B 16.10	Rectan-gular Full bore **	Cast Steel ASTM A 216 Grade WCB Cover: EN 10025 S355J0 S355J2G3	Cast Iron ASTM A 126 Class B	Manual
							Steel	

** 1/2", 3/4" and 1 1/4" Round port full bore.

	WRENCH TYPE 8 L	GEAR TYPE C	GEAR TYPE D
	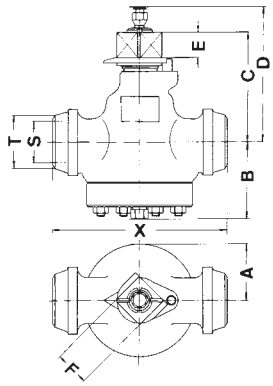	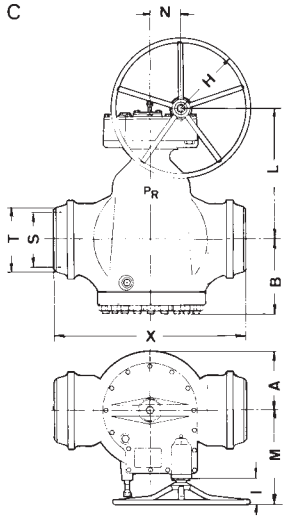	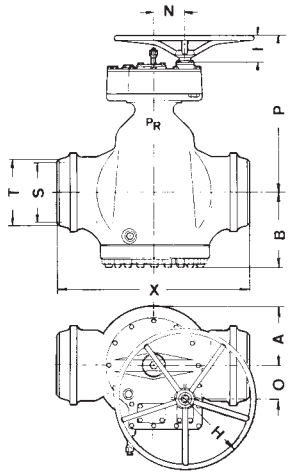
Plug	DN 1/2" - 3"	DN 1/2" - 20"	DN 3" - 20"
Cast Iron	5-AR 70574 N	5-AR 70574 C	5-AR 70574 D
Steel	5-AR 70577 N	5-AR 70577 C	5-AR 70577 D

DN	A	B	C	D	E	F	H	I	L	M	N	O	P	S	T	X
1/2"	48	95	120	159	24	30	150	101	112	181	47			Inside pipe dimension to be specified by purchaser.	23,3	*216
3/4"	48	94	121	160	24	30	150	101	113	181	47				28,7	*229
1"	49	98	124	163	24	30	150	101	115	181	47				35,4	254
1 1/4"	64	104	130	169	24	30	150	101	121	181	47				44,2	279
1 1/2"	64	115	145	185	24	30	150	101	136	181	47				50,3	305
2"	85	149	186	241	42	50	150	101	157	195	71				62,3	368
2 1/2"	95	169	202	256	42	50	150	101	172	195	71				75	419
3"	100	173	225	285	47	55	200	101	257	268	85	46	381		91	381
4"	125	199	271	334	51	65	200	101	295	268	85	46	419		117	*457
6"	158	271					300	101	358	293	95	70	482		172	610
8"	200	314					300	101	462	400	160	108	596		223	737
10"	250	353					350	101	546	423	175	130	680		278	838
12"	302	425					350	101	609	460	176	168	743		329	965
14"	316	470					450	101	660	501	200	210	792		362	*1029
16"	370	530					450	101	711	568	246	279	845		413	*1130
18"	410	590					450	101	899	660	299	270	1051		464	*1219
20"	460	640					550	111	1099	725	311	297	1259		516	*1321

Note: * Not included in the standards.

STRAIGHTWAY TAPER PLUG VALVES

CAST STEEL CLASS 900
REGULAR PATTERN
RECTANGULAR PORT

Class	Max. CWP	Test Pressure	Pattern	Connections	Port	Materials		Operation
						Body & Cover	Plug	
900	2220 Psi	Shell 3350 Psi Seat 2442 Psi	Straight-way Regular	Flanges R.F. or R.J. ASME B 16.5 Face to Face ASME B 16.10	Rectan-gular	Cast Steel ASTM A 216 Grade WCB Cover: EN 10025 S355J0 S355J2G3	Cast Iron ASTM A 126 Class B Steel	Manual

	WRENCH TYPE 8 L	GEAR TYPE C	GEAR TYPE D
	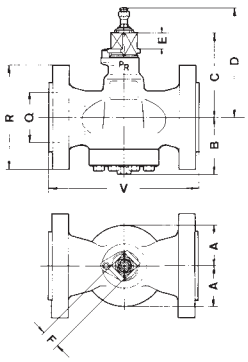	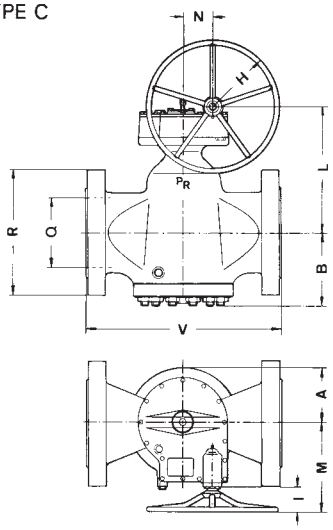	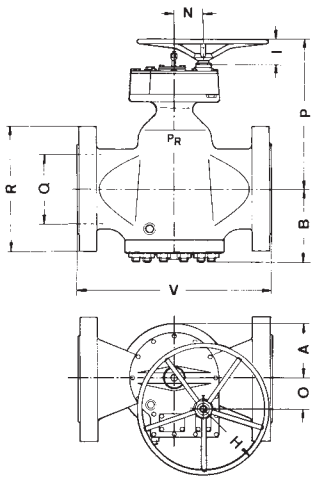
Plug	DN 1 1/2" - 3"	DN 1 1/2" - 20"	DN 4" - 20"
Cast Iron	5-AV 70174 N	5-AV 70174 C	5-AV 70174 D
Steel	5-AV 70177 N	5-AV 70177 C	5-AV 70177 D

																	Rased Face	Ring Joint
DN	A	B	C	D	E	F	H	I	L	M	N	O	P	Q	R		V	V
1 1/2"	64	104	130	162	24	30	150	101	122	181	47			35	178		305	305
2"	64	115	145	188	24	30	150	101	137	181	47			48	216		368	371
2 1/2"	85	149	186	229	42	50	150	101	158	195	71			57	244		419	422
3"	95	164	204	256	42	50	150	101	173	195	71			73	241		381	384
4"	105	170	239	329	47	55	200	101	260	268	85	46	383	98	292		*457	*460
6"	150	215					300	101	336	293	95	70	460	146	381		610	613
8"	178	277					300	101	437	361	135	69	571	191	470		737	740
10"	217	325					300	101	467	400	160	108	601	238	546		838	841
12"	250	353					350	101	544	423	175	130	678	282	610		965	968
14"	278	378					350	101	568	423	175	130	702	311	641		*1029	*1038
16"	302	422					350	101	608	460	176	168	742	356	705		*1130	*1140
18"	341	490					450	101	676	501	200	210	810	400	787		*1219	*1232
20"	404	600					450	101	721	568	246	279	855	445	857		*1321	*1334

Note: * Not included in the standards.

STRAIGHTWAY TAPER PLUG VALVES

CAST STEEL CLASS 900
REGULAR PATTERN
RECTANGULAR PORT

Class	Max. CWP	Test Pressure	Pattern	Connections	Port	Materials		Operation
						Body & Cover	Plug	
900	2220 Psi	Shell 3350 Psi Seat 2442 Psi	Straight-way Regular	Welding Ends ASME B 16.25 Face to Face ASME B 16.10	Rectan-gular	Cast Steel ASTM A 216 Grade WCB Cover: EN 10025 S355J0 S355J2G3	Cast Iron ASTM A 126 Class B Steel	Manual

	WRENCH TYPE 8 L	GEAR TYPE C	GEAR TYPE D
	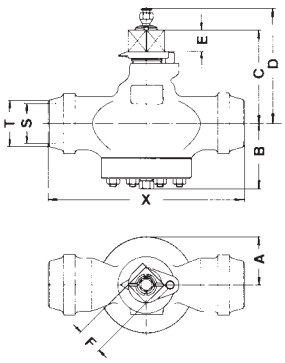	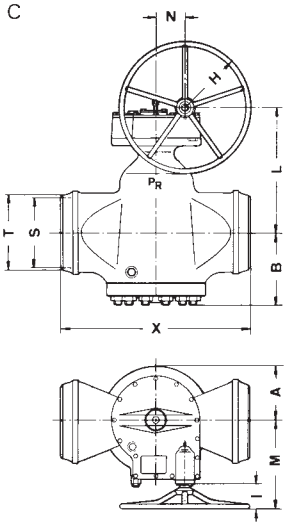	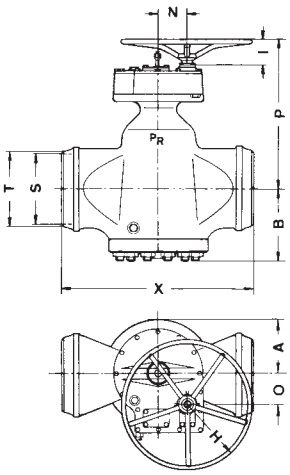
Plug	DN 1 1/2" - 3"	DN 1 1/2" - 20"	DN 4" - 20"
Cast Iron	5-AV 70574 N	5-AV 70574 C	5-AV 70574 D
Steel	5-AV 70577 N	5-AV 70577 C	5-AV 70577 D

DN	A	B	C	D	E	F	H	I	L	M	N	O	P	S	T	X
1 1/2"	64	104	130	162	24	30	150	101	122	181	47			Inside pipe dimension to be specified by purchaser.	*50,3	305
2"	64	115	145	188	24	30	150	101	137	181	47				*62,3	368
2 1/2"	85	149	186	229	42	50	150	101	158	195	71				75	419
3"	95	164	204	256	42	50	150	101	173	195	71				91	381
4"	105	170	239	329	47	55	200	101	260	268	85	46	383		117	*457
6"	150	215					300	101	336	293	95	70	460		172	610
8"	178	277					300	101	437	361	135	69	571		223	737
10"	217	325					300	101	467	400	160	108	601		278	838
12"	250	353					350	101	544	423	175	130	678		329	965
14"	278	378					350	101	568	423	175	130	702		362	*1029
16"	302	422					350	101	608	460	176	168	742		413	*1130
18"	341	490					450	101	676	501	200	210	810		464	*1219
20"	404	600					450	101	721	568	246	279	855		516	*1321

Note: * Not included in the standards.

STRAIGHTWAY TAPER PLUG VALVES

CAST STEEL CLASS 900
VENTURI PATTERN
RECTANGULAR PORT

Class	Max. CWP	Test Pressure	Pattern	Connections	Port	Materials		Operation
						Body & Cover	Plug	
900	2220 Psi	Shell 3350 Psi Seat 2442 Psi	Straight-way Venturi	Flanges R.F. or R.J. ASME B 16.5 Face to Face ASME B 16.10	Rectan-gular	Cast Steel ASTM A 216 Grade WCB Cover: EN 10025 S355J0 S355J2G3	Cast Iron ASTM A 126 Class B Steel	Manual

	WRENCH TYPE 8 L	GEAR TYPE C	GEAR TYPE D
	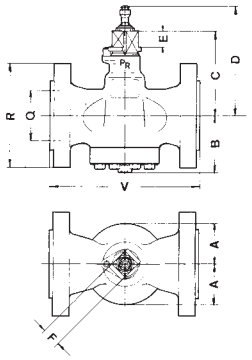	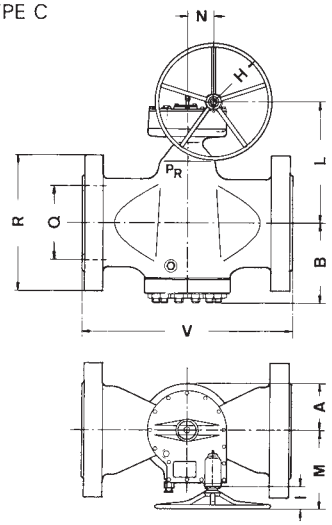	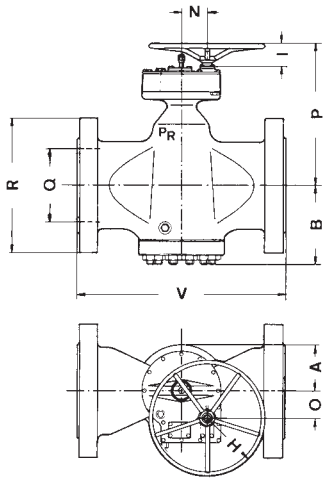
Plug	DN 1 1/2" - 4"	DN 1 1/2" - 24"	DN 4" - 24"
Cast Iron	5-AT 70174 N	5-AT 70174 C	5-AT 70174 D
Steel	5-AT 70177 N	5-AT 70177 C	5-AT 70177 D

DN	A	B	C	D	E	F	H	I	L	M	N	O	P	Q	R	V	V
1 1/2"	64	104	130	162	24	30	150	101	122	181	47			35	178	*305	*305
2"	64	115	145	177	24	30	150	101	137	181	47			48	216	*368	*371
2 1/2"	85	149	186	229	42	50	150	101	158	195	71			57	245	*419	*422
3"	95	169	202	245	42	50	150	101	173	195	71			73	241	*381	*384
4"	100	173	225	275	47	55	200	101	258	268	85			98	292	457	460
6"	114	211					200	101	302	268	85	46	424	146	381	610	613
8"	145	284					300	101	350	293	95	70	473	191	470	737	740
10"	157	290					300	101	435	361	135	69	569	238	546	838	841
12"	184	331					300	101	504	400	160	108	638	283	610	965	968
14"	192	353					300	101	510	400	160	108	644	311	641	*1029	*1038
16"	223	384					350	101	584	423	175	130	718	356	705	1130	1140
18"	238	407					350	101	597	423	175	130	731	400	787	*1219	*1232
20"	273	471					350	101	638	460	176	168	772	445	857	1321	1334
24"	310	535					350	101	760	483	196	192	894	533	1041	*1549	*1569

Note: * Not included in the standards.

STRAIGHTWAY TAPER PLUG VALVES

CAST STEEL CLASS 900
VENTURI PATTERN
RECTANGULAR PORT

Class	Max. CWP	Test Pressure	Pattern	Connections	Port	Materials		Operation
						Body & Cover	Plug	
900	2220 Psi	Shell 3350 Psi Seat 2442 Psi	Straight-way Venturi	Welding Ends ASME B 16.25 End to End ASME B 16.10	Rectan-gular	Cast Steel ASTM A 216 Grade WCB Cover: EN 10025 S355J0 S355J2G3	Cast Iron ASTM A 126 Class B Steel	Manual

	WRENCH TYPE 8 L	GEAR TYPE C	GEAR TYPE D
	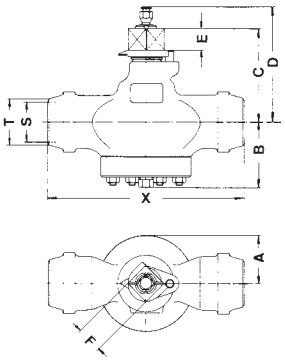	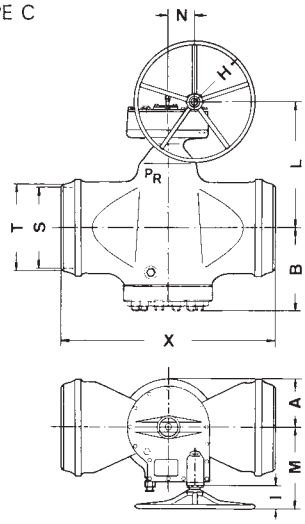	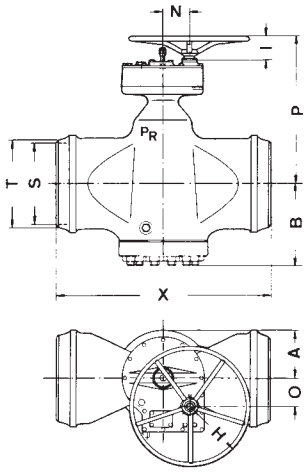
Plug	DN 1 1/2" - 4"	DN 1 1/2" - 24"	DN 4" - 24"
Cast Iron	5-AT 70574 N	5-AT 70574 C	5-AT 70574 D
Steel	5-AT 70577 N	5-AT 70577 C	5-AT 70577 D

DN	A	B	C	D	E	F	H	I	L	M	N	O	P	S	T	X
1 1/2"	64	104	130	162	24	30	150	101	122	181	47			Inside pipe dimension to be specified by purchaser.	*50,3	*305
2"	64	115	145	177	24	30	150	101	137	181	47				*62,3	*368
2 1/2"	85	149	186	229	42	50	150	101	158	195	71				75	*419
3"	95	169	202	245	42	50	150	101	173	195	71				91	*381
4"	100	173	225	275	47	55	200	101	258	268	85				117	457
6"	114	211					200	101	302	268	85	46	424		172	610
8"	145	284					300	101	350	293	95	70	473		223	737
10"	157	290					300	101	435	361	135	69	569		278	838
12"	184	331					300	101	504	400	160	108	638		329	965
14"	192	353					300	101	510	400	160	108	644		362	*1029
16"	223	384					350	101	584	423	175	130	718		413	1130
18"	238	407					350	101	597	423	175	130	731		464	*1219
20"	273	471					350	101	638	460	176	168	772		516	1321
24"	310	535					350	101	760	483	196	192	894		619	*1549

Note: * Not included in the standards.

STRAIGHTWAY TAPER PLUG VALVES

CAST STEEL CLASS 1500
REGULAR PATTERN
RECTANGULAR PORT FULL BORE

Class	Max. CWP	Test Pressure	Pattern	Connections	Port	Materials		Operation
						Body & Cover	Plug	
1500	3705 Psi	Shell 5575 Psi Seat 4075 Psi	Straight-way Regular	Screwed API 5B table 2.1 or ASME B1.20.1	Rectan-gular Full bore **	Cast Steel ASTM A 216 Grade WCB Cover: EN 10025 S355J0 S355J2G3	Cast Iron ASTM A 126 Class B	Manual
							Steel	

** 1/2", 3/4" and 1 1/4" Round port full bore.

	WRENCH TYPE 8 L	GEAR TYPE C
	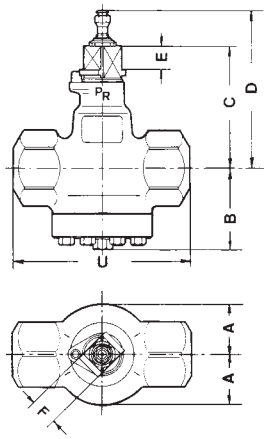	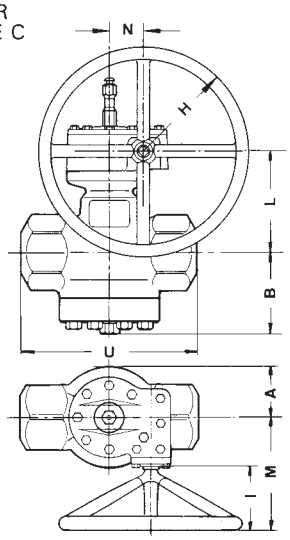
Plug	DN 1/2" - 3"	DN 1/2" - 4"
Cast Iron	5-AR 70084 N	5-AR 70084 C
Steel	5-AR 70087 N	5-AR 70087 C

DN	A	B	C	D	E	F	H	I	L	M	N	U
1/2"	48	95	120	159	24	30	150	101	112	181	47	116
3/4"	48	94	121	160	24	30	150	101	113	181	47	116
1"	49	98	124	163	24	30	150	101	115	181	47	149
1 1/4"	64	104	130	169	24	30	150	101	121	181	47	165
1 1/2"	64	115	145	185	24	30	150	101	136	181	47	181
2"	85	149	186	241	42	50	150	101	157	195	71	216
2 1/2"	95	164	202	256	42	50	150	101	172	195	71	251
3"	119	176	225	285	47	55	200	101	256	268	85	284
4"	135	203	268	340	51	65	300	101	303	293	100	318

STRAIGHTWAY TAPER PLUG VALVES

CAST STEEL CLASS 1500
REGULAR PATTERN
RECTANGULAR PORT FULL BORE

Class	Max. CWP	Test Pressure	Pattern	Connections	Port	Materials		Operation
						Body & Cover	Plug	
1500	3705 Psi	Shell 5575 Psi Seat 4075 Psi	Straight-way Regular	Flanges R.F. or R.J. ASME B 16.5 Face to Face ASME B 16.10	Rectan-gular Full bore **	Cast Steel ASTM A 216 Grade WCB Cover: EN 10025 S355J0 S355J2G3	Cast Iron ASTM A 126 Class B	Manual
							Steel	

** 1/2", 3/4" and 1 1/4" Round port full bore.

	WRENCH TYPE 8 L	GEAR TYPE C	GEAR TYPE D
	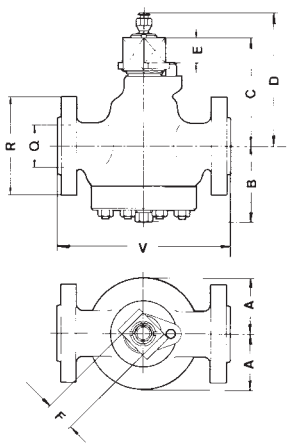	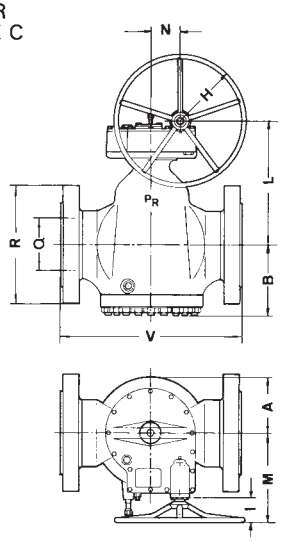	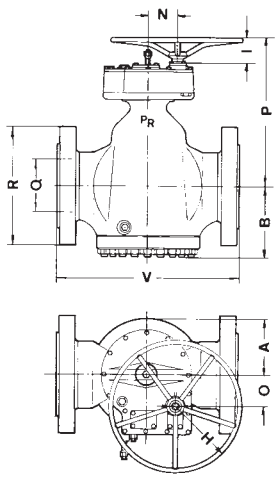
Plug	DN 1/2" - 3"	DN 1/2" - 20"	DN 3" - 20"
Cast Iron	5-AR 70184 N	5-AR 70184 C	5-AR 70184 D
Steel	5-AR 70187 N	5-AR 70187 C	5-AR 70187 D

DN	A	B	C	D	E	F	H	I	L	M	N	O	P	Q	R	Raised Face V	Ring Joint V
1/2"	48	95	120	159	24	30	150	101	111	181	47			13	121	*216	*216
3/4"	48	94	121	160	24	30	150	101	112	181	47			17	130	*229	*229
1"	49	98	124	163	24	30	150	101	115	181	47			22	149	254	254
1 1/4"	64	104	130	169	24	30	150	101	121	181	47			29	159	279	279
1 1/2"	64	115	145	185	24	30	150	101	136	181	47			35	178	305	305
2"	85	149	186	241	42	50	150	101	157	195	71			48	216	368	371
2 1/2"	95	164	202	256	42	50	150	101	166	195	71			57	245	419	422
3"	123	176	225	285	47	55	200	101	256	268	85	46	379	70	267	470	473
4"	127	203	268	340	51	65	300	101	303	293	95	70	427	92	311	546	549
6"	200	286					300	101	420	361	135	69	554	137	394	705	711
8"	240	403					350	101	449	423	175	130	583	178	483	832	842
10"	288	408					350	101	560	460	176	168	694	222	584	991	1000
12"	363	564					450	101	627	501	200	210	761	264	673	1130	1146
14"	416	605					450	101	691	568	246	279	825	289	749	*1257	*1276
16"	465	512					450	101	804	660	289	270	956	330	826	*1384	*1407
18"	514	684					550	111	1047	725	311	297	1207	372	984	*1537	*1559
20"	571	821					550	111	1152	795	351	368	1312	416	1168	*1664	*1686

Note: * Not included in the standards.

STRAIGHTWAY TAPER PLUG VALVES

CAST STEEL CLASS 1500
REGULAR PATTERN
RECTANGULAR PORT FULL BORE

Class	Max. CWP	Test Pressure	Pattern	Connections	Port	Materials		Operation
						Body & Cover	Plug	
1500	3705 Psi	Shell 5575 Psi Seat 4075 Psi	Straight-way Regular	Welding Ends ASME B 16.25 End to End ASME B 16.10	Rectan-gular Full bore **	Cast Steel ASTM A 216 Grade WCB Cover: EN 10025 S355J0 S355J2G3	Cast Iron ASTM A 126 Class B Steel	Manual

** 1/2", 3/4" and 1 1/4" Round port full bore.

	WRENCH TYPE 8 L	GEAR TYPE C	GEAR TYPE D
	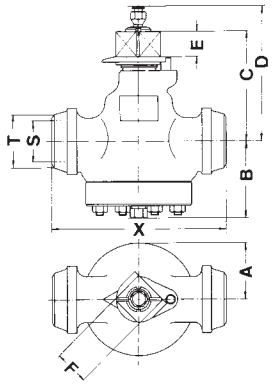	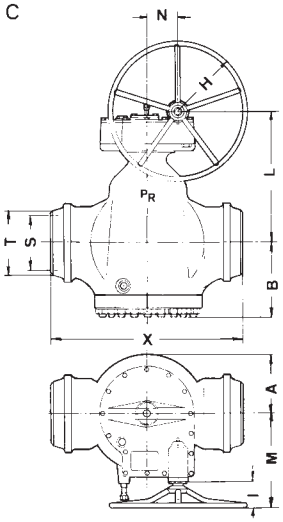	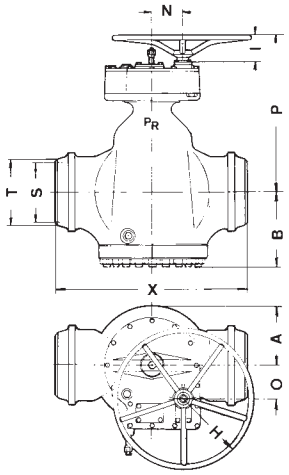
Plug	DN 1/2" - 3"	DN 1/2" - 20"	DN 3" - 20"
Cast Iron	5-AR 70584 N	5-AR 70584 C	5-AR 70584 D
Steel	5-AR 70587 N	5-AR 70587 C	5-AR 70587 D

DN	A	B	C	D	E	F	H	I	L	M	N	O	P	S	T	X
1/2"	48	95	120	159	24	30	150	101	111	181	47			Inside pipe dimension to be specified by purchaser.	*23,3	*216
3/4"	48	94	121	160	24	30	150	101	112	181	47				*28,7	*229
1"	49	98	124	163	24	30	150	101	115	181	47				*35,4	254
1 1/4"	64	104	130	169	24	30	150	101	121	181	47				*44,2	279
1 1/2"	64	115	145	185	24	30	150	101	136	181	47				*50,3	305
2"	85	149	186	241	42	50	150	101	157	195	71				*62,3	368
2 1/2"	95	164	202	256	42	50	150	101	166	195	71				75	419
3"	123	176	225	285	47	55	200	101	256	268	85	46	379		91	470
4"	127	203	268	340	51	65	300	101	303	293	95	70	427		117	546
6"	200	286					300	101	420	361	135	69	554		172	705
8"	240	403					350	101	449	423	175	130	583		223	832
10"	288	408					350	101	560	460	176	168	694		278	991
12"	363	564					450	101	627	501	200	210	761		329	1130
14"	416	605					450	101	691	568	246	279	825		362	*1257
16"	465	512					450	101	804	660	289	270	956		413	*1384
18"	514	684					550	111	1047	725	311	297	1207		464	*1537
20"	571	821					550	111	1152	795	351	368	1312		516	*1686

Note: * Not included in the standards.

STRAIGHTWAY TAPER PLUG VALVES

CAST STEEL CLASS 1500
REGULAR PATTERN
RECTANGULAR PORT

Class	Max. CWP	Test Pressure	Pattern	Connections	Port	Materials		Operation
						Body & Cover	Plug	
1500	3705 Psi	Shell 5575 Psi Seat 4075 Psi	Straight-way Regular	Flanges R.F. or R.J. ASME B 16.5 Face to Face ASME B 16.10	Rectan-gular	Cast Steel ASTM A 216 Grade WCB Cover: EN 100254 S355 J0 S355 J2G3	Cast Iron ASTM A 126 Class B Steel	Manual

	WRENCH TYPE 8 L	GEAR TYPE C	GEAR TYPE D
	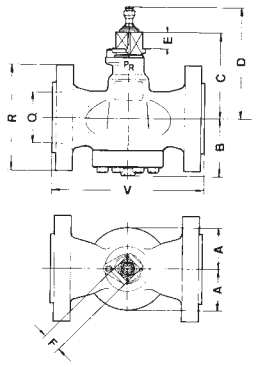	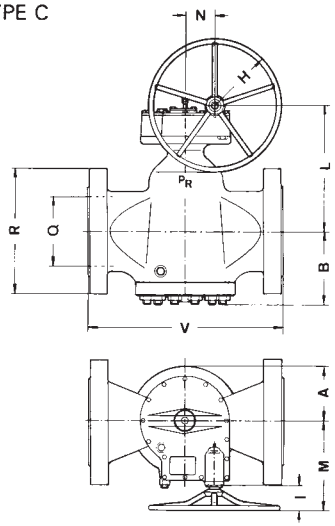	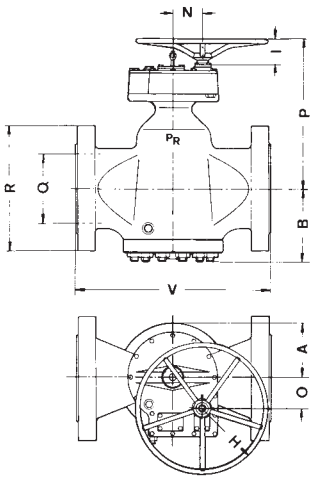
Plug	DN 1 1/2" - 3"	DN 1 1/2" - 20"	DN 4" - 20"
Cast Iron	5-AV 70184 N	5-AV 70184 C	5-AV 70184 D
Steel	5-AV 70187 N	5-AV 70187 C	5-AV 70187 D

																Raised Face	Ring Joint
DN	A	B	C	D	E	F	H	I	L	M	N	O	P	Q	R	V	V
1 1/2"	64	92	128	171	24	30	150	101	121	181	47			35	178	305	305
2"	64	115	143	187	24	30	150	101	136	181	47			48	216	368	372
2 1/2"	85	138	182	239	42	50	150	101	155	195	71			57	244	419	422
3"	95	164	201	258	42	50	150	101	166	195	71			70	267	470	473
4"	128	179	223	284	47	55	200	101	259	268	85	46	382	92	311	546	549
6"	177	239					300	101	341	293	95	70	465	137	394	705	711
8"	208	291					300	101	425	361	135	69	559	178	483	832	842
10"	240	404					350	101	449	423	175	130	584	222	584	991	1000
12"	300	455					350	101	562	460	176	168	696	264	673	1130	1146
14"	350	555					350	101	611	483	196	192	745	289	749	*1257	*1276
16"	367	563					450	101	627	501	200	210	761	330	826	*1384	*1407
18"	431	605					450	101	690	568	246	279	824	372	914	*1537	*1559
20"	483	699					450	101	885	660	299	270	1037	416	984	*1664	*1686

Note: * Not included in the standards.

STRAIGHTWAY TAPER PLUG VALVES

CAST STEEL CLASS 1500
REGULAR PATTERN
RECTANGULAR PORT

Class	Max. CWP	Test Pressure	Pattern	Connections	Port	Materials		Operation
						Body & Cover	Plug	
1500	3705 Psi	Shell 5575 Psi Seat 4075 Psi	Straight-way Regular	Welding Ends ASME B 16.25 End to End ASME B 16.10	Rectan-gular	Cast Steel ASTM A 216 Grade WCB Cover: EN 10025 S355J0 S355J2G3	Cast Iron ASTM A 126 Class B Steel	Manual

	WRENCH TYPE 8 L	GEAR TYPE C	GEAR TYPE D
Plug	DN 1 1/2" - 3"	DN 1 1/2" - 20"	DN 4" - 20"
Cast Iron	5-AV 70584 N	5-AV 70584 C	5-AV 70584 D
Steel	5-AV 70587 N	5-AV 70587 C	5-AV 70587 D

DN	A	B	C	D	E	F	H	I	L	M	N	O	P	S	T	X
1 1/2"	64	92	128	171	24	30	150	101	121	181	47			Inside pipe dimension to be specified by purchaser.	*50,3	305
2"	64	115	143	187	24	30	150	101	136	181	47				*62,3	368
2 1/2"	85	138	182	239	42	50	150	101	155	195	71				75	419
3"	95	164	201	258	42	50	150	101	166	195	71				91	470
4"	128	179	223	284	47	55	200	101	259	268	85	46	382		117	546
6"	177	239					300	101	341	293	95	70	465		172	705
8"	208	291					300	101	425	361	135	69	559		223	832
10"	240	404					350	101	449	423	175	130	584		278	991
12"	300	455					350	101	562	460	176	168	696		329	1130
14"	350	555					350	101	611	483	196	192	745		362	*1257
16"	367	563					450	101	627	501	200	210	761		413	*1384
18"	431	605					450	101	690	568	246	279	824		464	*1537
20"	483	699					450	101	885	660	299	270	1037		516	*1664

Note: * Not included in the standards.

STRAIGHTWAY TAPER PLUG VALVES

CAST STEEL CLASS 1500
VENTURI PATTERN
RECTANGULAR PORT

Class	Max. CWP	Test Pressure	Pattern	Connections	Port	Materials		Operation
						Body & Cover	Plug	
1500	3705 Psi	Shell 5575 Psi Seat 4075 Psi	Straight-way Venturi	Flanges R.F. or R.J. ASME B 16.5 Face to Face ASME B 16.10	Rectan-gular	Cast Steel ASTM A 216 Grade WCB Cover: EN 10025 S355J0 S355J2G3	Cast Iron ASTM A 126 Class B Steel	Manual

	WRENCH TYPE 8 L	GEAR TYPE C	GEAR TYPE D
	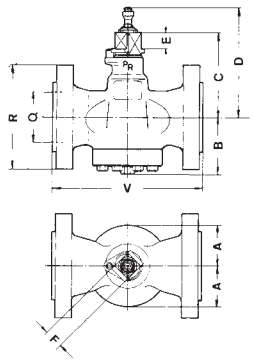	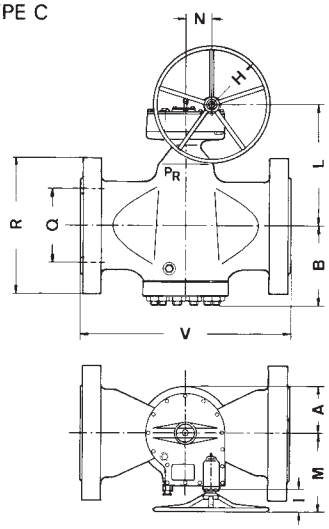	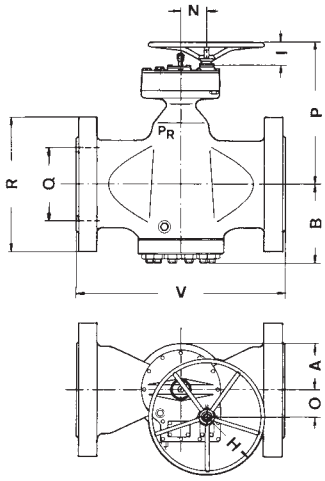
Plug	DN 1 1/2" - 4"	DN 1 1/2" - 20"	DN 6" - 20"
Cast Iron	5-AT 70184 N	5-AT 70184 C	5-AT 70184 D
Steel	5-AT 70187 N	5-AT 70187 C	5-AT 70187 D

																Raised Face	Ring Joint
DN	A	B	C	D	E	F	H	I	L	M	N	O	P	Q	R	V	V
1 1/2"	64	100	130	162	24	30	150	101	128	181	47			35	178	*305	*305
2"	64	115	145	177	24	30	150	101	136	181	47			48	216	*368	*372
2 1/2"	85	149	186	229	42	50	150	101	157	195	71			57	245	*419	*422
3"	95	164	202	245	42	50	150	101	166	195	71			70	267	*470	*473
4"	119	176	225	275	47	55	200	101	256	268	85			92	311	*546	*549
6"	136	221					300	101	311	293	95	70	435	137	394	705	711
8"	185	294					300	101	395	361	135	69	529	178	483	832	841
10"	191	311					300	101	447	400	160	108	581	222	584	991	1000
12"	229	372					350	101	521	423	175	130	655	264	673	1130	1146
14"	233	385					350	101	527	423	175	130	661	289	749	*1257	*1276
16"	266	414					350	101	591	460	176	168	725	330	826	1384	1407
18"	278	432					350	101	602	460	176	168	736	372	914	*1537	*1559
20"	316	491					350	101	643	483	196	192	777	416	984	*1664	*1686

Note: * Not included in the standards.

STRAIGHTWAY TAPER PLUG VALVES

CAST STEEL CLASS 1500
VENTURI PATTERN
RECTANGULAR PORT

Class	Max. CWP	Test Pressure	Pattern	Connections	Port	Materials		Operation
						Body & Cover	Plug	
1500	3705 Psi	Shell 5575 Psi Seat 4075 Psi	Straight-way Venturi	Welding Ends ASME B 16.25 End to End ASME B 16.10	Rectan-gular	Cast Steel ASTM A 216 Grade WCB Cover: EN 10025 S355J0 S355J2G3	Cast Iron ASTM A 126 Class B Steel	Manual

	WRENCH TYPE 8 L	GEAR TYPE C	GEAR TYPE D
	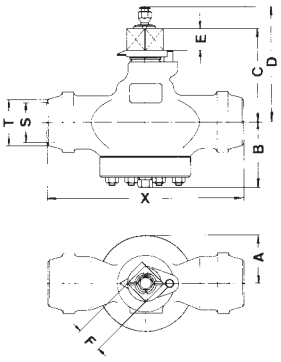	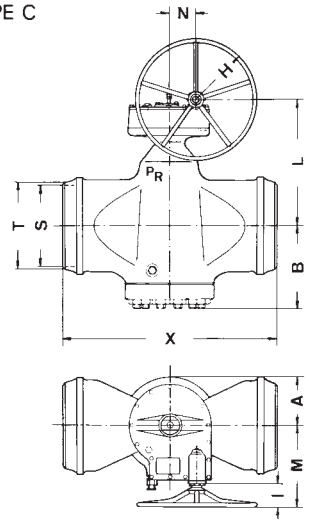	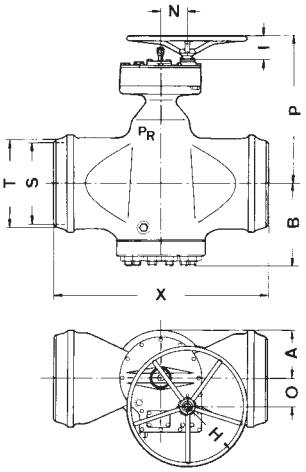
Plug	DN 1 1/2" - 4"	DN 1 1/2" - 20"	DN 6" - 20"
Cast Iron	5-AT 70584 N	5-AT 70584 C	5-AT 70584 D
Steel	5-AT 70587 N	5-AT 70587 C	5-AT 70587 D

DN	A	B	C	D	E	F	H	I	L	M	N	O	P	S	T	X
1 1/2"	64	100	130	162	24	30	150	101	128	181	47			Inside pipe dimension to be specified by purchaser.	*50,3	*305
2"	64	115	145	177	24	30	150	101	136	181	47				*62,3	*368
2 1/2"	85	149	186	229	42	50	150	101	157	195	71				75	*419
3"	95	164	202	245	42	50	150	101	166	195	71				91	*470
4"	119	176	225	275	47	55	200	101	256	268	85				117	*546
6"	136	221					300	101	311	293	95	70	435		172	705
8"	185	294					300	101	395	361	135	69	529		223	832
10"	191	311					300	101	447	400	160	108	581		278	991
12"	229	372					350	101	521	423	175	130	655		329	1130
14"	233	385					350	101	527	423	175	130	661		362	*1257
16"	266	414					350	101	591	460	176	168	725		413	1384
18"	278	432					350	101	602	460	176	168	736		464	*1537
20"	316	491					350	101	643	483	196	192	777		516	*1664

Note: * Not included in the standards.

STRAIGHTWAY TAPER PLUG VALVES

CAST STEEL CLASS 2500
REGULAR PATTERN
RECTANGULAR PORT FULL BORE

Class	Max. CWP	Test Pressure	Pattern	Connections	Port	Materials		Operation
						Body & Cover	Plug	
2500	6170 Psi	Shell 9275 Psi Seat 6787 Psi	Straight-way Regular	Screwed API 5B table 2.1 or ASME B1.20.1	Rectan-gular Full bore **	Cast Steel ASTM A 216 Grade WCB Cover: EN 10025 S355J0 S355J2G3	Cast Iron ASTM A 126 Class B	Manual
							Steel	

** 1/2" and 3/4" Round port full bore.

	WRENCH TYPE 8 L	GEAR TYPE C
	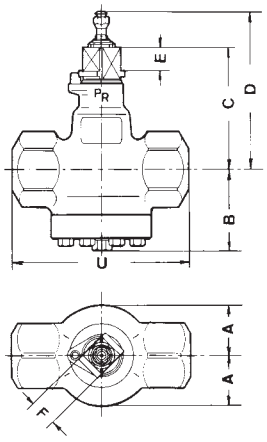	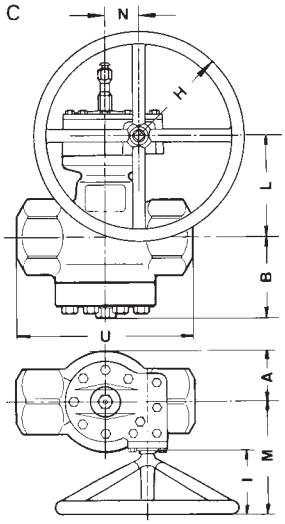
Plug	DN 1/2" - 3"	DN 1/2" - 3"
Cast Iron	5-AR 70094 N	5-AR 70094 C
Steel	5-AR 70097 N	5-AR 70097 C

DN	A	B	C	D	E	F	H	I	L	M	N	U
1/2"	50	86	121	161	24	30	150	101	112	181	47	116
3/4"	50	86	121	161	24	30	150	101	112	181	47	116
1"	53	90	124	164	24	30	150	101	115	181	47	149
1 1/4"	53	96	137	178	32	36	150	101	128	181	47	165
1 1/2"	85	128	155	196	32	36	150	101	138	195	65	181
2"	86	164	191	246	42	50	150	101	157	195	71	216
2 1/2"	103	164	194	250	42	50	200	101	230	268	85	251
3"	122	193	223	278	47	55	200	101	256	268	85	284

STRAIGHTWAY TAPER PLUG VALVES

CAST STEEL CLASS 2500
REGULAR PATTERN
RECTANGULAR PORT FULL BORE

Class	Max. CWP	Test Pressure	Pattern	Connections	Port	Materials		Operation
						Body & Cover	Plug	
2500	6170 Psi	Shell 9275 Psi Seat 6787 Psi	Straight-way Regular	Flanges R.F. or R.J. ASME B 16.5 Face to Face ASME B 16.10	Rectan-gular Full bore **	Cast Steel ASTM A 216 Grade WCB Cover: EN 10025 S355J0 S355J2G3	Cast Iron ASTM A 126 Class B Steel	Manual

** 1/2" and 3/4" Round port full bore.

	WRENCH TYPE 8 L	GEAR TYPE C	GEAR TYPE D
	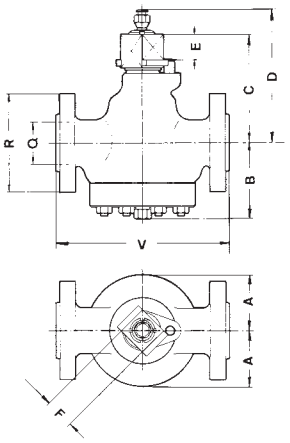	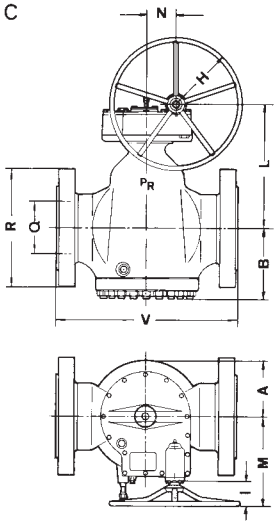	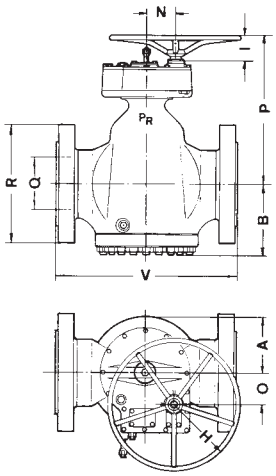
Plug	DN 1/2" - 3"	DN 1/2" - 12"	DN 2 1/2" - 12"
Cast Iron	5-AR 70194 N	5-AR 70194 C	5-AR 70194 D
Steel	5-AR 70197 N	5-AR 70197 C	5-AR 70197 D

																Raised Face	Ring Joint
DN	A	B	C	D	E	F	H	I	L	M	N	O	P	Q	R	V	V
1/2"	50	86	121	161	24	30	150	101	112	181	47			11	133	*264	*264
3/4"	50	86	121	161	24	30	150	101	112	181	47			14	140	*273	*273
1"	53	90	124	164	24	30	150	101	115	181	47			19	159	308	308
1 1/4"	53	96	137	178	32	36	150	101	128	181	47			25	184	*349	*352
1 1/2"	85	128	155	196	32	36	150	101	138	195	65			29	203	384	387
2"	86	164	191	246	42	50	150	101	157	195	71			38	235	451	454
2 1/2"	103	164	194	250	42	50	200	101	230	268	85	46	352	48	267	508	514
3"	122	193	223	278	47	55	200	101	256	268	85	46	379	57	305	578	584
4"	138	226	265	328	51	65	300	101	298	293	95	70	422	73	356	673	683
6"	218	370					300	101	420	400	160	108	554	111	483	914	927
8"	278	392					350	101	447	423	175	130	581	146	553	1022	1038
10"	323	497					350	101	572	483	196	192	706	184	673	1270	1292
12"	385	587					450	101	608	501	200	210	742	219	762	1422	1445

Note: * Not included in the standards.

STRAIGHTWAY TAPER PLUG VALVES

CAST STEEL CLASS 2500
REGULAR PATTERN
RECTANGULAR PORT FULL BORE

Class	Max. CWP	Test Pressure	Pattern	Connections	Port	Materials		Operation
						Body & Cover	Plug	
2500	6170 Psi	Shell 9275 Psi Seat 6787 Psi	Straight-way Regular	Welding Ends ASME B 16.25 End to End ASME B 16.10	Rectan-gular Full bore **	Cast Steel ASTM A 216 Grade WCB Cover: EN 10025 S355J0 S355J2G3	Cast Iron ASTM A 126 Class B Steel	Manual

** 1/2" and 3/4" Round port full bore.

	WRENCH TYPE 8 L	GEAR TYPE C	GEAR TYPE D
	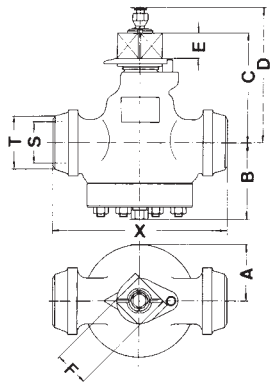	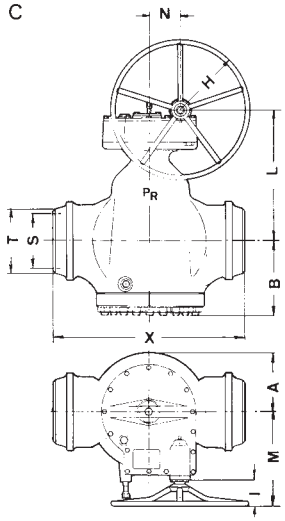	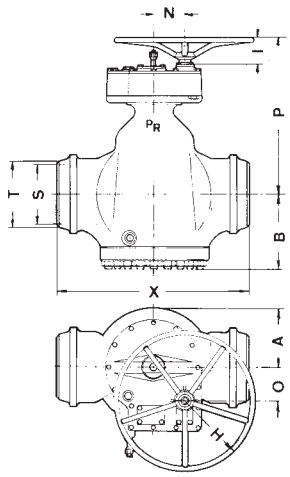
Plug	DN 1/2" - 3"	DN 1/2" - 12"	DN 2 1/2" - 12"
Cast Iron	5-AR 70594 N	5-AR 70594 C	5-AR 70594 D
Steel	5-AR 70597 N	5-AR 70597 C	5-AR 70597 D

DN	A	B	C	D	E	F	H	I	L	M	N	O	P	S	T	X
1/2"	50	86	121	161	24	30	150	101	112	181	47			Inside pipe dimension to be specified by purchaser.	23,3	*264
3/4"	50	86	121	161	24	30	150	101	112	181	47				28,7	*273
1"	53	90	124	164	24	30	150	101	115	181	47				35,4	308
1 1/4"	53	96	137	178	32	36	150	101	128	181	47				44,2	*349
1 1/2"	85	128	155	196	32	36	150	101	138	195	65				50,3	384
2"	86	164	191	246	42	50	150	101	157	195	71				62,3	451
2 1/2"	103	164	194	250	42	50	200	101	230	268	85	46	352		75	508
3"	122	193	223	278	47	55	200	101	256	268	85	46	379		91	578
4"	138	226	265	328	51	65	300	101	298	293	95	70	422		117	673
6"	218	370					300	101	420	400	160	108	554		172	914
8"	278	392					350	101	447	423	175	130	581		223	1022
10"	323	497					350	101	572	483	196	192	706		278	1270
12"	385	587					450	101	608	501	200	210	742		329	1422

Note: * Not included in the standards.

STRAIGHTWAY TAPER PLUG VALVES

CAST STEEL CLASS 2500
REGULAR PATTERN
RECTANGULAR PORT

Class	Max. CWP	Test Pressure	Pattern	Connections	Port	Materials		Operation
						Body & Cover	Plug	
2500	6170 Psi	Shell 9275 Psi Seat 6787 Psi	Straight-way Regular	Flanges R.F. or R.J. ASME B 16.5 Face to Face ASME B 16.10	Rectan-gular	Cast Steel ASTM A 216 Grade WCB Cover: EN 10025 S355J0 S355J2G3	Cast Iron ASTM A 126 Class B Steel	Manual

	WRENCH TYPE 8 L	GEAR TYPE C	GEAR TYPE D
	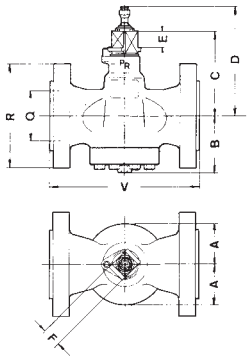	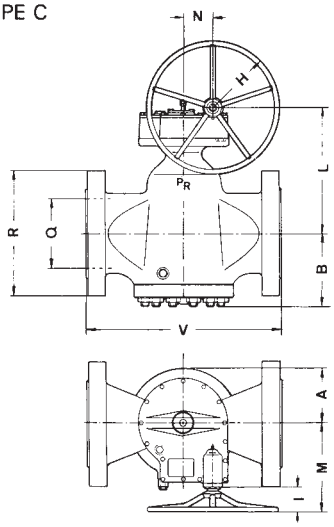	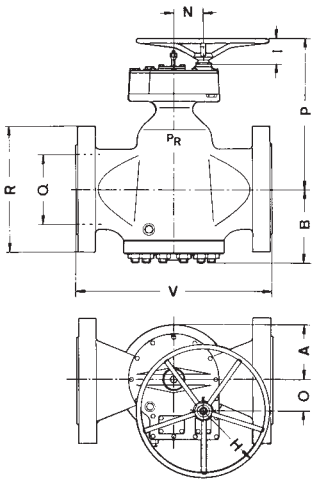
Plug	DN 1 1/2" - 3"	DN 1 1/2" - 12"	DN 3" - 12"
Cast Iron	5-AV 70194 N	5-AV 70194 C	5-AV 70194 D
Steel	5-AV 70197 N	5-AV 70197 C	5-AV 70197 D

																Raised Face	Ring Joint
DN	A	B	C	D	E	F	H	I	L	M	N	O	P	Q	R	V	V
1 1/2"	53	96	137	170	32	36	150	101	128	181	47			28	203	384	387
2"	85	128	155	197	32	36	150	101	138	195	65			38	235	451	454
2 1/2"	100	145	183	237	42	50	150	101	154	195	65			48	267	508	514
3"	103	162	194	245	42	50	200	101	231	268	85	46	354	57	305	578	584
4"	122	202	223	283	47	55	200	101	256	268	85	46	380	73	356	673	682
6"	182	294					300	101	376	361	135	69	510	111	483	914	927
8"	218	370					300	101	421	400	160	108	555	146	552	1022	1038
10"	278	394					350	101	448	423	175	130	582	184	673	1270	1292
12"	323	499					350	101	573	483	196	192	707	219	762	1422	1445

STRAIGHTWAY TAPER PLUG VALVES

CAST STEEL CLASS 2500
REGULAR PATTERN
RECTANGULAR PORT

Class	Max. CWP	Test Pressure	Pattern	Connections	Port	Materials		Operation
						Body & Cover	Plug	
2500	6170 Psi	Shell 9275 Psi Seat 6787 Psi	Straight-way Regular	Welding Ends ASME B 16.25 End to End ASME B 16.10	Rectan-gular	Cast Steel ASTM A 216 Grade WCB Cover: EN 10025 S355J0 S355J2G3	Cast Iron ASTM A 126 Class B Steel	Manual

	WRENCH TYPE 8 L	GEAR TYPE C	GEAR TYPE D
	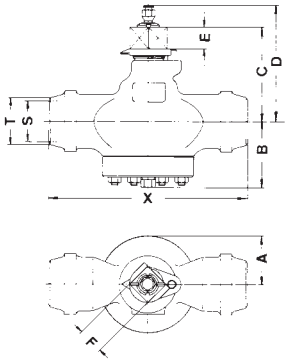	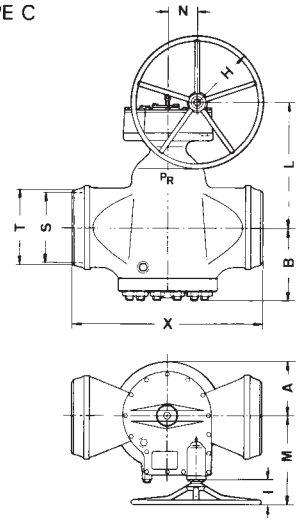	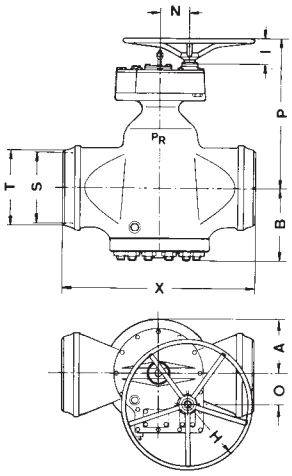
Plug	DN 1 1/2" - 3"	DN 1 1/2" - 12"	DN 3" - 12"
Cast Iron	5-AV 70594 N	5-AV 70594 C	5-AV 70594 D
Steel	5-AV 70597 N	5-AV 70597 C	5-AV 70597 D

DN	A	B	C	D	E	F	H	I	L	M	N	O	P	S	T	X
1 1/2"	53	96	137	170	32	36	150	101	128	181	47			Inside pipe dimension to be specified by purchaser.	50,3	384
2"	85	128	155	197	32	36	150	101	138	195	65				62,3	451
2 1/2"	100	145	183	237	42	50	150	101	154	195	65				75	508
3"	103	162	194	249	42	50	200	101	231	268	85	46	354		91	578
4"	122	202	223	283	47	55	200	101	256	268	85	46	380		117	673
6"	182	294					300	101	376	361	135	69	510		172	914
8"	218	370					300	101	421	400	160	108	555		223	1022
10"	278	394					350	101	448	423	175	130	582		278	1270
12"	323	499					350	101	573	483	196	192	707		329	1422

STRAIGHTWAY TAPER PLUG VALVES

CAST STEEL CLASS 2500
VENTURI PATTERN
RECTANGULAR PORT

Class	Max. CWP	Test Pressure	Pattern	Connections	Port	Materials		Operation
						Body & Cover	Plug	
2500	6170 Psi	Shell 9275 Psi Seat 6787 Psi	Straight-way Venturi	Flanges R.F. or R.J. ASME B 16.5 Face to Face ASME B 16.10 Regular Pattern	Rectan-gular	Cast Steel ASTM A 216 Grade WCB Cover: EN 10025 S355J0 S355J2G3	Cast Iron ASTM A 126 Class B	Manual
							Steel	

	WRENCH TYPE 8 L	GEAR TYPE C	GEAR TYPE D
	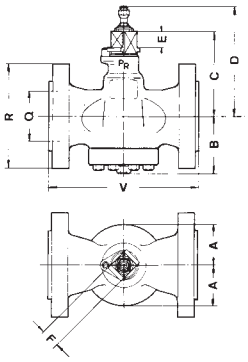	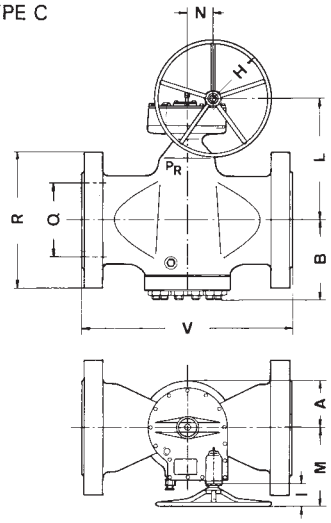	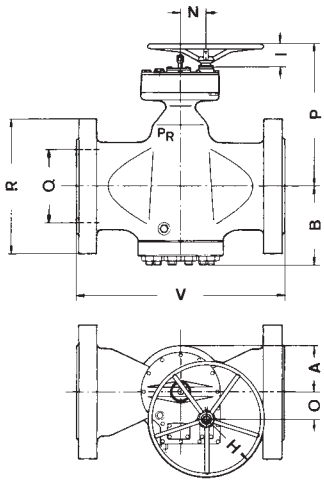
Plug	DN 1 1/2" - 3"	DN 1 1/2" - 12"	DN 3" - 12"
Cast Iron	5-AT 70194 N	5-AT 70194 C	5-AT 70194 D
Steel	5-AT 70197 N	5-AT 70197 C	5-AT 70197 D

																Raised Face	Ring Joint
DN	A	B	C	D	E	F	H	I	L	M	N	O	P	Q	R	V	V
1 1/2"	53	96	137	170	32	36	150	101	128	181	47			29	203	384	387
2"	85	128	155	187	32	36	150	101	138	195	65			38	235	451	454
2 1/2"	86	164	191	234	42	50	150	101	157	195	71			48	267	508	514
3"	103	164	194	237	42	50	200	101	230	268	85	46	352	57	305	578	584
4"	122	193	223	273	47	55	200	101	256	268	85	46	379	73	356	673	683
6"	146	280					300	101	313	293	95	70	435	111	483	914	927
8"	203	313					300	101	398	361	135	69	532	146	553	1022	1038
10"	229	318					300	101	452	400	160	108	586	184	673	1270	1292
12"	264	461					350	101	525	423	175	130	659	219	762	1422	1445

STRAIGHTWAY TAPER PLUG VALVES

CAST STEEL CLASS 2500
VENTURI PATTERN
RECTANGULAR PORT

Class	Max. CWP	Test Pressure	Pattern	Connections	Port	Materials		Operation
						Body & Cover	Plug	
2500	6170 Psi	Shell 9275 Psi Seat 6787 Psi	Straight-way Venturi	Welding Ends ASME B 16.25 End to End ASME B 16.10 Regular Pattern	Rectan-gular	Cast Steel ASTM A 216 Grade WCB Cover: EN 10025 S355J0 S355J2G3	Cast Iron ASTM A 126 Class B Steel	Manual

	WRENCH TYPE 8 L	GEAR TYPE C	GEAR TYPE D
	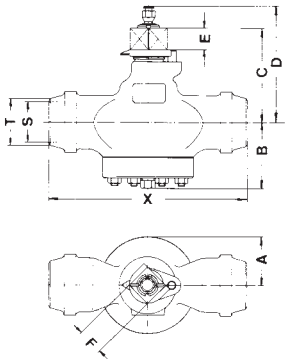	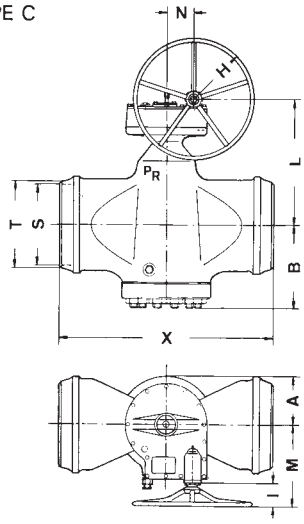	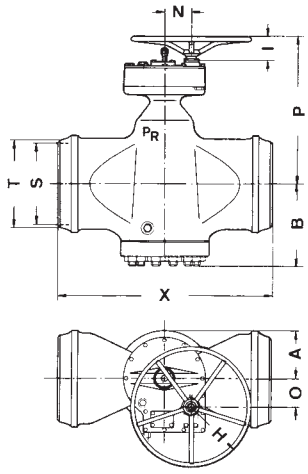
Plug	DN 1 1/2" - 3"	DN 1 1/2" - 20"	DN 3" - 20"
Cast Iron	5-AT 70594 N	5-AT 70594 C	5-AT 70594 D
Steel	5-AT 70597 N	5-AT 70597 C	5-AT 70597 D

DN	A	B	C	D	E	F	H	I	L	M	N	O	P	S	T	X
1 1/2"	53	96	137	170	32	36	150	101	128	181	47			Inside pipe dimension to be specified by purchaser.	50,3	384
2"	85	128	155	187	32	36	150	101	138	195	65				62,3	451
2 1/2"	86	164	191	234	42	50	150	101	157	195	71				75	508
3"	103	184	194	237	42	50	200	101	230	268	85	46	352		91	578
4"	122	193	223	273	47	55	200	101	256	268	85	46	379		117	673
6"	146	280					300	101	313	293	95	70	435		172	914
8"	203	313					300	101	398	361	135	69	532		223	1022
10"	229	318					300	101	452	400	160	108	586		278	1270
12"	264	461					350	101	525	423	175	130	659		329	1422
14"	275	474					350	101	529	460	176	168	663		362	1575
16"	306	504					350	101	594	483	196	192	728		413	1727
20"	346	581					450	101	646	501	200	210	780		516	2032

	Page
Inch to millimetre	F1
Decimal and millimetre equivalents	F2
Decimal equivalents	F3
Kilogram in pounds	F3
Pounds in kilogram	F3
Temperature conversion	F4
Presssure conversion	F5
Pressure/Temperature ratings for carbon steel valves	F6
Flange dimensions class 125 and class 150	F7
Flange dimensions class 250 and class 300	F8
Flange dimensions class 400 and class 600	F9
Flange dimensions class 900 and class 1500	F10
Flange dimensions class 2500	F11
Flange dimensions class 150 Ring Joint	F12
Flange dimensions class 300 Ring Joint	F13
Flange dimensions class 400 Ring Joint	F14
Flange dimensions class 600 Ring Joint	F15
Flange dimensions class 900 Ring Joint	F16
Flange dimensions class 1500 Ring Joint	F17
Flange dimensions class 2500 Ring Joint	F18
Socket Welding Ends dimensions	F19

Inch to millimeter (1 inch = 25,4 mm)

Inch	0	1/16	1/8	3/16	1/4	5/16	3/8	7/16	1/2	9/16	5/8	11/16	3/4	13/16	7/8	15/16
0	0,0	1,6	3,2	4,8	6,4	7,9	9,5	11,1	12,7	14,3	15,9	17,5	19,1	20,6	22,2	23,8
1	25,4	27,0	28,6	30,2	31,8	33,3	34,9	36,5	38,1	39,7	41,3	42,9	44,5	46,0	47,6	49,2
2	50,8	52,4	54,0	55,6	57,2	58,7	60,3	61,9	63,5	65,1	66,7	68,3	69,9	71,4	73,0	74,6
3	76,2	77,8	79,4	81,0	82,6	84,1	85,7	87,3	88,9	90,5	92,1	93,7	95,3	96,8	98,4	100,0
4	101,6	103,2	104,8	106,4	108,0	109,5	111,1	112,7	114,3	115,9	117,5	119,1	120,7	122,2	123,8	125,4
5	127,0	128,6	130,2	131,8	133,4	134,9	136,5	138,1	139,7	141,3	142,9	144,5	146,1	147,6	149,2	150,8
6	152,4	154,0	155,6	157,2	158,8	160,3	161,9	163,5	165,1	166,7	168,3	169,9	171,5	173,0	174,6	176,2
7	177,8	179,4	181,0	182,6	184,2	185,7	187,3	188,9	190,5	192,1	193,7	195,3	196,9	198,4	200,0	201,6
8	203,2	204,8	206,4	208,0	209,6	211,1	212,7	214,3	215,9	217,5	219,1	220,7	222,3	223,8	225,4	227,0
9	228,6	230,2	231,8	233,4	235,0	236,5	238,1	239,7	241,3	242,9	244,5	246,1	247,7	249,2	250,8	252,4
10	254,0	255,6	257,2	258,8	260,4	261,9	263,5	265,1	266,7	268,3	269,9	271,5	273,1	274,6	276,2	277,8
11	279,4	281,0	282,6	284,2	285,8	287,3	288,9	290,5	292,1	293,7	295,3	296,9	298,5	300,0	301,6	303,2
12	304,8	306,4	308,0	309,6	311,2	312,7	314,3	315,9	317,5	319,1	320,7	322,3	323,9	325,4	327,0	328,6
13	330,2	331,8	333,4	335,0	336,6	338,1	339,7	341,3	342,9	344,5	346,1	347,7	349,3	350,8	352,4	354,0
14	355,6	357,2	358,8	360,4	362,0	363,5	365,1	366,7	368,3	369,9	371,5	373,1	374,7	376,2	377,8	379,4
15	381,0	382,6	384,2	385,8	387,4	388,9	390,5	392,1	393,7	395,3	396,9	398,5	400,1	401,6	403,2	404,8
16	406,4	408,0	409,6	411,2	412,8	414,3	415,9	417,5	419,1	420,7	422,3	423,9	425,5	427,0	428,6	430,2
17	431,8	433,4	435,0	436,6	438,2	439,7	441,3	442,9	444,5	446,1	447,7	449,3	450,9	452,4	454,0	455,6
18	457,2	458,8	460,4	462,0	463,6	465,1	466,7	468,3	469,9	471,5	473,1	474,7	476,3	477,8	479,4	481,0
19	482,6	484,2	485,8	487,4	489,0	490,5	492,1	493,7	495,3	496,9	498,5	500,1	501,7	503,2	504,8	506,4
20	508,0	509,6	511,2	512,8	514,4	515,9	517,5	519,1	520,7	522,3	523,9	525,5	527,1	528,6	530,2	531,8
21	533,4	535,0	536,6	538,2	539,8	541,3	542,9	544,5	546,1	547,7	549,3	550,9	552,5	554,0	555,6	557,2
22	558,8	560,4	562,0	563,6	565,2	566,7	568,3	569,9	571,5	573,1	574,7	576,3	577,9	579,4	581,0	582,6
23	584,2	585,8	587,4	589,0	590,6	592,1	593,7	595,3	596,9	598,5	600,1	601,7	603,3	604,8	606,4	608,0
24	609,6	611,2	612,8	614,4	616,0	617,5	619,1	620,7	622,3	623,9	625,5	627,1	628,7	630,2	631,8	633,4
25	635,0	636,6	638,2	639,8	641,4	642,9	644,5	646,1	647,7	649,3	650,9	652,5	654,1	655,6	657,2	658,8
26	660,4	662,0	663,6	665,2	666,8	668,3	669,9	671,5	673,1	674,7	676,3	677,9	679,5	681,0	682,6	684,2
27	685,8	687,4	689,0	690,6	692,2	693,7	695,3	696,9	698,5	700,1	701,7	703,3	704,9	706,4	708,0	709,6
28	711,2	712,8	714,4	716,0	717,6	719,1	720,7	722,3	723,9	725,5	727,1	728,7	730,3	731,8	733,4	735,0
29	736,6	738,2	739,8	741,4	743,0	744,5	746,1	747,7	749,3	750,9	752,5	754,1	755,7	757,2	758,8	760,4
30	762,0	763,6	765,2	766,8	768,4	769,9	771,5	773,1	774,7	776,3	777,9	779,5	781,1	782,6	784,2	785,8
31	787,4	789,0	790,6	792,2	793,8	795,3	796,9	798,5	800,1	801,7	803,3	804,9	806,5	808,0	809,6	811,2
32	812,8	814,4	816,0	817,6	819,2	820,7	822,3	823,9	825,5	827,1	828,7	830,3	831,9	833,4	835,0	836,6
33	838,2	839,8	841,4	843,0	844,6	846,1	847,7	849,3	850,9	852,5	854,1	855,7	857,3	858,8	860,4	862,0
34	863,6	865,2	866,8	868,4	870,0	871,5	873,1	874,7	876,3	877,9	879,5	881,1	882,7	884,2	885,8	887,4
35	889,0	890,6	892,2	893,8	895,4	896,9	898,5	900,1	901,7	903,3	904,9	906,5	908,1	909,6	911,2	912,8
36	914,4	916,0	917,6	919,2	920,8	922,3	923,9	925,5	927,1	928,7	930,3	931,9	933,5	935,0	936,6	938,2
37	939,8	941,4	943,0	944,6	946,2	947,7	949,3	950,9	952,5	954,1	955,7	957,3	958,9	960,4	962,0	963,6
38	965,2	966,8	968,4	970,0	971,6	973,1	974,7	976,3	977,9	979,5	981,1	982,7	984,3	985,8	987,4	989,0
39	990,6	992,2	993,8	995,4	997,0	998,5	1000,1	1001,7	1003,3	1004,9	1006,5	1008,1	1009,7	1011,2	1012,8	1014,4
40	1016,0	1017,6	1019,2	1020,8	1022,4	1023,9	1025,5	1027,1	1028,7	1030,3	1031,9	1033,5	1035,1	1036,6	1038,2	1039,8
41	1041,4	1043,0	1044,6	1046,2	1047,8	1049,3	1050,9	1052,5	1054,1	1055,7	1057,3	1058,9	1060,5	1062,0	1063,6	1065,2
42	1066,8	1068,4	1070,0	1071,6	1073,2	1074,7	1076,3	1077,9	1079,5	1081,1	1082,7	1084,3	1085,9	1087,4	1089,0	1090,6
43	1092,2	1093,8	1095,4	1097,0	1098,6	1100,1	1101,7	1103,3	1104,9	1106,5	1108,1	1109,7	1111,3	1112,8	1114,4	1116,0
44	1117,6	1119,2	1120,8	1122,4	1124,0	1125,5	1127,1	1128,7	1130,3	1131,9	1133,5	1135,1	1136,7	1138,2	1139,8	1141,4
45	1143,0	1144,6	1146,2	1147,8	1149,4	1150,9	1152,5	1154,1	1155,7	1157,3	1158,9	1160,5	1162,1	1163,6	1165,2	1166,8
46	1168,4	1170,0	1171,6	1173,2	1174,8	1176,3	1177,9	1179,5	1181,1	1182,7	1184,3	1185,9	1187,5	1189,0	1190,6	1192,2
47	1193,8	1195,4	1197,0	1198,6	1200,2	1201,7	1203,3	1204,9	1206,5	1208,1	1209,7	1211,3	1212,9	1214,4	1216,0	1217,6
48	1219,2	1220,8	1222,4	1224,0	1225,6	1227,1	1228,7	1230,3	1231,9	1233,5	1235,7	1236,7	1238,3	1239,8	1241,4	1243,0
49	1244,6	1246,2	1247,8	1249,4	1251,0	1252,5	1254,1	1255,7	1257,3	1258,9	1260,5	1262,1	1263,7	1265,2	1266,8	1268,4
50	1270,0	1271,6	1273,2	1274,8	1276,4	1277,9	1279,5	1281,1	1282,7	1284,3	1285,9	1287,5	1289,1	1290,6	1292,2	1293,8

Decimal and millimeter equivalents

Fraction	Decimal	Millimeter	Fraction	Decimal	Millimeter
1/64	.015625	0.39688	33/64	.515625	13.09690
1/32	.03125	0.79375	17/32	.53125	13.49378
3/64	.046875	1.19063	35/64	.546875	13.89065
1/16	.0625	1.58750	9/16	.5625	14.28753
5/64	.078125	1.98438	37/64	.578125	14.68440
3/32	.09375	2.38125	19/32	.59375	15.08128
7/64	.109375	2.77813	39/64	.609375	15.47816
1/8	.125	3.17501	5/8	.625	15.87503
9/64	.140625	3.57188	41/64	.640625	16.27191
5/32	.15625	3.96876	21/32	.65625	16.66878
11/64	.171875	4.36563	43/64	.671875	17.06566
3/16	.1875	4.76251	11/16	.6875	17.46253
13/64	.203125	5.15939	45/64	.703125	17.85941
7/32	.21875	5.55626	23/32	.71875	18.25629
15/64	.234375	5.95314	47/64	.734375	18.65316
1/4	.25	6.35001	3/4	.75	19.05004
17/64	.265625	6.74689	49/64	.765625	19.44691
9/32	.28125	7.14376	25/32	.78125	19.84379
19/64	.296875	7.54064	51/64	.796875	20.24067
5/16	.3125	7.93752	13/16	.8125	20.63754
21/64	.328125	8.33439	53/64	.828125	21.03442
11/32	.34375	8.73127	27/32	.84375	21.43129
23/64	.359375	9.12814	55/64	.859375	21.82817
3/8	.375	9.52502	7/8	.875	22.22504
25/64	.390625	9.92189	57/64	.890625	22.62192
13/32	.40625	10.31877	29/32	.90625	23.01880
27/64	.421875	10.71565	59/64	.921875	23.41567
7/16	.4375	11.11252	15/16	.9375	23.81255
29/64	.453125	11.50940	61/64	.953125	24.20942
15/32	.46875	11.90627	31/32	.96875	24.60630
31/64	.484375	12.30315	63/64	.984375	25.00318
1/2	.5	12.70003	1	1.0	25.40005

Decimal equivalents

(0,10 inch = 2,54 millimeter)

Inch	0.00	.01	.02	.03	.04	.05	.06	.07	.08	.09	Inch
0.00	0.00	0.25	0.51	0.76	1.02	1.27	1.52	1.78	2.03	2.29	0.00
.10	2.54	2.79	3.05	3.30	3.56	3.81	4.06	4.32	4.57	4.83	.10
.20	5.08	5.33	5.59	5.84	6.10	6.35	6.60	6.86	7.11	7.37	.20
.30	7.62	7.87	8.13	8.38	8.64	8.89	9.14	9.40	9.65	9.91	.30
.40	10.60	10.41	10.67	10.92	11.18	11.43	11.68	11.94	12.19	12.45	.40
.50	12.70	12.95	13.21	13.46	13.72	13.97	14.22	14.48	14.73	14.99	.50
.60	15.24	15.49	15.75	16.00	16.26	16.51	16.76	17.02	17.27	17.53	.60
.70	17.78	18.03	18.29	18.54	18.80	19.05	19.30	19.56	19.81	20.07	.70
.80	20.32	20.57	20.83	21.08	21.34	21.59	21.84	22.10	22.35	22.61	.80
.90	22.86	23.11	23.37	23.62	23.88	24.13	24.38	24.64	24.89	25.15	.90

Kilogram in pounds

(1 kilogram = 2,2046)

Kilo-gram	0	1	2	3	4	5	6	7	8	9
0	0.00	2.20	4.41	6.61	8.82	11.02	13.23	15.43	17.64	19.84
10	22.05	24.25	26.46	28.66	30.86	33.07	35.27	37.48	39.68	41.89
20	44.09	46.30	48.50	50.71	52.91	55.12	57.32	59.52	61.73	63.93
30	66.14	68.34	70.55	72.75	74.96	77.16	79.37	81.57	83.77	85.98
40	88.18	90.39	92.59	94.80	97.00	99.21	101.41	103.62	105.82	108.03
50	110.23	112.43	114.64	116.84	119.05	121.25	123.46	125.66	127.87	130.07
60	132.28	134.48	136.69	138.89	141.09	143.30	145.50	147.71	149.91	152.12
70	154.32	156.53	158.73	160.94	163.14	165.35	167.35	169.75	171.96	174.16
80	176.37	178.57	180.78	182.98	185.19	187.39	189.60	191.80	194.00	196.21
90	198.41	200.62	202.82	205.03	207.23	209.44	211.64	213.85	216.05	218.26

Pounds in kilogram

(1 pound = 0,4536 kilogram)

Pounds	0	1	2	3	4	5	6	7	8	9
0	0.00	0.45	0.91	1.36	1.81	2.27	2.72	3.18	3.63	4.08
10	4.54	4.99	5.44	5.90	6.35	6.80	7.26	7.71	8.16	8.62
20	9.07	9.53	9.98	10.43	10.89	11.34	11.79	12.25	12.70	13.15
30	13.61	14.06	14.52	14.97	15.42	15.88	16.33	16.78	17.24	17.69
40	18.14	18.60	19.05	19.50	19.96	20.41	20.87	21.32	21.77	22.23
50	22.68	23.13	23.59	24.04	24.49	24.95	25.40	25.86	26.31	26.76
60	27.22	27.67	28.12	28.58	29.03	29.48	29.94	30.39	30.84	31.30
70	31.75	32.21	32.66	33.11	33.57	34.02	34.47	34.93	35.38	35.83
80	36.29	36.74	37.20	37.65	38.10	38.56	39.01	39.46	39.92	40.37
90	40.82	41.28	41.73	42.18	42.64	43.09	43.55	44.00	44.45	44.91

−495.4−0			1−60			61−290			300−890			900−3000		
C =	F	C = F	C =	F	C = F	C =	F	C = F	C =	F	C = F	C =	F	C = F
−273	−459.4		−17.2	1	33.8	16.1	61	141.8	149	300	572	482	900	1652
−268	−450		−16.7	2	35.6	16.7	62	143.6	154	310	590	488	910	1670
−262	−440		−16.1	3	37.4	17.2	63	145.4	160	320	608	493	920	1688
−257	−430		−15.6	4	39.2	17.8	64	147.2	166	330	626	499	930	1706
−251	−420		−15.0	5	41.0	18.3	65	149.0	171	340	644	504	940	1724
−246	−410		−14.4	6	42.8	18.9	66	150.8	177	350	662	510	950	1742
−240	−400		−13.9	7	44.6	19.4	67	152.6	182	360	680	516	960	1760
−234	−390		−13.3	8	46.4	20.0	68	154.4	188	370	698	521	970	1778
−229	−380		−12.8	9	48.2	20.6	69	156.2	193	380	716	527	980	1796
−223	−370		−12.2	10	50.0	21.1	70	158.0	199	390	734	532	990	1814
−218	−360		−11.7	11	51.8	21.7	71	159.8	204	400	752	538	1000	1832
−212	−350		−11.1	12	53.6	22.2	72	161.6	210	410	770	549	1020	1868
−207	−340		−10.6	13	55.4	22.8	73	163.4	216	420	788	560	1040	1904
−201	−330		−10.0	14	57.2	23.3	74	165.2	221	430	806	571	1060	1940
−196	−320		− 9.4	15	59.0	23.9	75	167.0	227	440	824	582	1080	1976
−190	−310		− 8.9	16	60.8	24.4	76	168.8	232	450	842	593	1100	2012
−184	−300		− 8.3	17	62.6	25.0	77	170.6	238	460	860	604	1120	2048
−179	−290		− 7.8	18	64.4	25.6	78	172.4	243	470	878	616	1140	2084
−173	−280		− 7.2	19	66.2	26.1	79	174.2	249	480	896	627	1160	2120
−169	−273	−459.4	− 6.7	20	68.0	26.7	80	176.0	254	490	914	638	1180	2156
−168	−270	−454	− 6.1	21	69.8	27.2	81	177.8	260	500	932	649	1200	2192
−162	−260	−436	− 5.6	22	71.6	27.8	82	179.6	266	510	950	660	1220	2228
−157	−250	−418	− 5.0	23	73.4	28.3	83	181.4	271	520	968	671	1240	2264
−151	−240	−400	− 4.4	24	75.2	28.9	84	183.2	277	530	986	682	1260	2300
−146	−230	−382	− 3.9	25	77.0	29.4	85	185.0	282	540	1004	693	1280	2336
−140	−220	−364	− 3.3	26	78.8	30.0	86	186.8	288	550	1022	704	1300	2372
−134	−210	−346	− 2.8	27	80.6	30.6	87	188.6	293	560	1040	732	1350	2462
−129	−200	−328	− 2.2	28	82.4	31.1	88	190.4	299	570	1058	760	1400	2552
−123	−190	−310	− 1.7	29	84.2	31.7	89	192.2	304	580	1076	788	1450	2642
−118	−180	−292	− 1.1	30	86.0	32.2	90	194.0	310	590	1094	816	1500	2732
−112	−170	−274	.6	31	87.8	32.8	91	195.8	316	600	1112	843	1550	2822
−107	−160	−256	.0	32	89.6	33.3	92	197.6	321	610	1130	871	1600	2912
−101	−150	−238	.6	33	91.4	33.9	93	199.4	327	620	1148	899	1650	3002
− 96	−140	−220	1.1	34	93.2	34.4	94	201.2	332	630	1166	927	1700	3092
− 90	−130	−202	1.7	35	95.0	35.0	95	203.0	338	640	1184	954	1750	3182
− 84	−120	−184	2.2	36	96.8	35.6	96	204.8	343	650	1202	882	1800	3272
− 79	−110	−166	2.8	37	98.6	36.1	97	206.6	349	660	1220	1010	1850	3362
− 73	−100	−148	3.3	38	100.4	36.7	98	208.4	354	670	1238	1038	1900	3452
− 68	− 90	−130	3.9	39	102.2	37.2	99	210.2	360	680	1256	1066	1950	3542
− 62	− 80	−112	4.4	40	104.0	37.8	100	212.0	366	690	1274	1093	2000	3632
− 57	− 70	− 90	5.0	41	105.8	43	110	230	371	700	1292	1121	2050	3722
− 51	− 60	− 76	5.6	42	107.6	49	120	248	377	710	1310	1149	2100	3812
− 46	− 50	− 58	6.1	43	109.4	54	130	266	382	720	1328	1177	2150	3902
− 40	− 40	− 40	6.7	44	111.2	60	140	284	388	730	1346	1204	2200	3992
− 34	− 30	− 22	7.2	45	113.0	66	150	302	393	740	1364	1232	2250	4082
− 29	− 20	− 4	7.8	46	114.8	71	160	320	399	750	1382	1260	2300	4172
− 23	− 10	14	8.3	47	116.6	77	170	338	404	760	1400	1288	2350	4262
− 17.8	0	32	8.9	48	118.4	82	180	356	410	770	1418	1316	2400	4352
			9.4	49	120.2	88	190	374	416	780	1436	1343	2450	4442
			10.0	50	122.0	93	200	392	421	790	1454	1371	2500	4532
			10.6	51	123.8	99	210	410	427	800	1472	1399	2550	4622
			11.1	52	125.6	100	212	413.6	442	810	1490	1427	2600	4712
			11.7	53	127.4	104	220	428	438	820	1508	1454	2650	4802
			12.2	54	129.2	110	230	446	443	830	1526	1482	2700	4892
			12.8	55	131.0	116	240	464	449	840	1544	1510	2750	4982
			13.3	56	132.8	121	250	482	454	850	1562	1538	2800	5072
			13.9	57	134.6	127	260	500	460	860	1580	1566	2850	5162
			14.4	58	136.4	132	270	518	466	870	1598	1593	2900	5252
			15.0	59	138.2	138	280	536	471	880	1616	1621	2950	5342
			15.6	60	140.0	143	290	554	477	890	1634	1649	3000	5432

Pounds/square inch (psi) to kg/cm²

1 – 40		41 – 80		81 – 200		205 – 500		510 – 900		910 – 1500	
psi	kg/cm²	psi	kg/cm²	psi	kg/cm²	psi	kg/cm²	psi	kg/cm²	psi	kg/cm²
1	.07	41	2.88	81	5.69	205	14.41	510	35.86	910	63.98
2	.14	42	2.95	82	5.77	210	14.76	520	36.56	920	64.68
3	.21	43	3.02	83	5.84	215	15.12	530	37.26	930	65.39
4	.28	44	3.09	84	5.91	220	15.47	540	37.97	940	66.09
5	.35	45	3.16	85	5.98	225	15.82	550	38.67	950	66.79
6	.42	46	3.23	86	6.05	230	16.17	560	39.37	960	67.49
7	.49	47	3.30	87	6.12	235	16.52	570	40.07	970	68.20
8	.56	48	3.37	88	6.19	240	16.87	580	40.78	980	68.90
9	.63	49	3.45	89	6.26	245	17.23	590	41.48	990	69.60
10	.70	50	3.52	90	6.33	250	17.58	600	42.18	1000	70.31
11	.77	51	3.59	91	6.40	255	17.93	610	42.89	1010	71.01
12	.84	52	3.66	92	6.47	260	18.28	620	43.59	1020	71.71
13	.91	53	3.73	93	6.54	265	18.63	630	44.29	1030	72.42
14	.98	54	3.80	94	6.61	270	18.98	640	45.00	1040	73.12
15	1.05	55	3.87	95	6.68	275	19.33	650	45.70	1050	73.82
16	1.12	56	3.94	96	6.75	280	19.69	660	46.40	1060	74.52
17	1.20	57	4.01	97	6.82	285	20.04	670	47.11	1070	75.23
18	1.27	58	4.08	98	6.89	290	20.39	680	47.81	1080	75.93
19	1.34	59	4.15	99	6.96	295	20.74	690	48.51	1090	76.63
20	1.41	60	4.22	100	7.03	300	21.09	700	49.21	1100	77.34
21	1.48	61	4.29	105	7.38	310	21.80	710	49.92	1120	78.74
22	1.55	62	4.36	110	7.73	320	22.50	720	50.62	1140	80.15
23	1.62	63	4.43	115	8.09	330	23.20	730	51.35	1160	81.56
24	1.69	64	4.50	120	8.44	340	23.90	740	52.03	1180	82.96
25	1.76	65	4.57	125	8.79	350	24.61	750	52.73	1200	84.37
26	1.83	66	4.64	130	9.14	360	25.31	760	53.43	1220	85.77
27	1.90	67	4.71	135	9.49	370	26.01	770	54.14	1240	87.18
28	1.97	68	4.78	140	9.84	380	26.72	780	54.84	1260	88.59
29	2.04	69	4.85	145	10.19	390	27.42	790	55.54	1280	89.99
30	2.11	70	4.92	150	10.55	400	28.12	800	56.25	1300	91.40
31	2.18	71	4.99	155	10.90	410	28.83	810	56.95	1320	92.60
32	2.25	72	5.06	160	11.25	420	29.53	820	57.65	1340	94.21
33	2.32	73	5.13	165	11.60	430	30.23	830	58.35	1360	95.62
34	2.39	74	5.20	170	11.95	440	30.93	840	59.06	1380	97.02
35	2.46	75	5.27	175	12.30	450	31.64	850	59.76	1400	98.43
36	2.53	76	5.34	180	12.66	460	32.34	860	60.46	1420	99.84
37	2.60	77	5.41	185	13.01	470	33.04	870	61.17	1440	101.24
38	2.67	78	5.48	190	13.36	480	33.75	880	61.87	1460	102.65
39	2.74	79	5.55	195	13.71	490	34.45	890	62.57	1480	104.05
40	2.81	80	5.62	200	14.06	500	35.15	900	63.28	1500	105.46

Note: 1 atmosphere pressure = 14,7 psi = 1,033 Kg. per sq. cm
1 psi = 2,31 feet head of water = 0,0703066 Kg. per sq. cm

TEMPERATURE IN °F	WORKING PRESSURE IN psi BY CLASSES						
	150	300	400	600	900	1500	2500
–20 TO 100	285	740	990	1480	2220	3705	6170
200	260	675	900	1350	2025	3375	5625
300	230	655	875	1315	1970	3280	5470
400	200	635	845	1270	1900	3170	5280
500	170	600	800	1200	1795	2995	4990
600	140	550	730	1095	1640	2735	4560
650	125	535	715	1075	1610	2685	4475
700	110	535	710	1065	1600	2665	4440
750	95	505	670	1010	1510	2520	4200
800	80	410	550	825	1235	2060	3430
850	65	270	355	535	805	1340	2230
900	50	170	230	345	515	860	1430
950	35	105	140	205	310	515	860
1000	20	50	70	105	155	260	430

TEMPERATURE IN °C	WORKING PRESSURE IN bar BY CLASSES						
	150	300	400	600	900	1500	2500
–29 TO 38	19.6	51.1	68.1	102.1	153.2	255.3	425.5
50	19.2	50.1	66.8	100.2	150.2	250.4	417.3
100	17.7	46.4	61.8	92.8	139.1	231.9	386.5
150	15.8	45.2	60.3	90.5	135.7	226.1	376.9
200	14.0	43.8	58.4	87.6	131.5	219.1	365.2
250	12.1	41.7	55.6	83.4	125.2	208.6	347.7
300	10.2	38.7	51.6	77.5	116.2	193.7	322.8
350	8.4	37.0	49.3	73.9	110.9	184.8	308.0
375	7.4	36.5	48.6	72.9	109.4	182.3	303.9
400	6.5	34.5	46.0	69.0	103.5	172.5	287.5
425	5.6	28.8	38.3	57.5	86.3	143.8	239.6
450	4.7	20.0	26.7	40.1	60.1	100.2	166.9
475	3.7	13.5	18.1	27.1	40.6	67.7	112.9
500	2.8	8.8	11.7	17.6	26.4	44.0	73.3
525	1.9	5.2	6.9	10.4	15.5	25.9	43.2
540	1.3	3.3	4.3	6.5	9.8	16.3	27.2

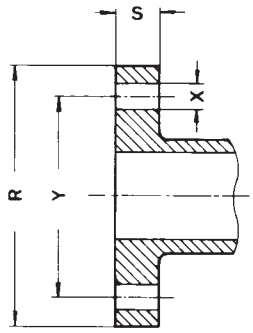

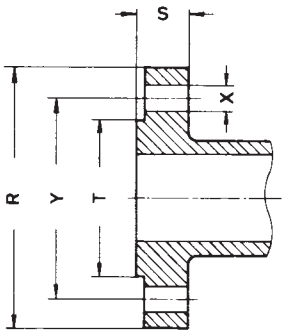

CLASS 125 SEMI STEEL FLAT FACE FLANGES

Valve Size	R Flange Diameter	S Flange Thickness	U No. of Bolts	V Size of Bolts in	X Size of Holes	Y Bolt Circle Diameter
* 1/2"	* 88,9	* 11,1	* 4	* 1/2"	* 15,9	* 60,3
* 3/4"	* 98,4	* 11,1	* 4	* 1/2"	* 15,9	* 69,9
1"	108,0	11,1	4	1/2"	15,9	79,4
1 1/4"	117,5	12,7	4	1/2"	15,9	88,9
1 1/2"	127,0	14,3	4	1/2"	15,9	98,4
2"	152,4	15,9	4	5/8"	19,1	120,7
2 1/2"	177,8	17,5	4	5/8"	19,1	139,7
3"	190,5	19,1	4	5/8"	19,1	152,4
4"	228,6	23,8	8	5/8"	19,1	190,5
5"	254,0	23,8	8	3/4"	22,2	215,9
6"	279,4	25,4	8	3/4"	22,2	241,3
8"	342,9	28,6	8	3/4"	22,2	298,5
10"	406,4	30,2	12	7/8"	25,4	362,0
12"	482,6	31,8	12	7/8"	25,4	431,8
14"	533,4	34,9	12	1"	28,6	476,3
16"	596,9	36,5	16	1"	28,6	539,8
18"	635,0	39,7	16	1 1/8"	31,8	577,9
20"	698,5	42,9	20	1 1/8"	31,8	635,0
24"	812,8	47,6	20	1 1/4"	34,9	749,3
30"	984,3	54,0	28	1 1/4"	34,9	914,4

CLASS 150 CAST STEEL RAISED FACE FLANGES

Valve Size	R Flange Diameter	S Flange Thickness	T 1/16" Raised Face Diameter	U No. of Bolts	V Size of Bolts in	X Size of Holes	Y Bolt Circle Diameter
1/2"	88,9	11,1	34,9	4	1/2"	15,9	60,3
3/4"	98,4	11,1	42,9	4	1/2"	15,9	69,9
1"	108,0	11,1	50,8	4	1/2"	15,9	79,4
1 1/4"	117,5	12,7	63,5	4	1/2"	15,9	88,9
1 1/2"	127,0	14,3	73,0	4	1/2"	15,9	98,4
2"	152,4	15,9	92,1	4	5/8"	19,1	120,7
2 1/2"	177,8	17,5	104,8	4	5/8"	19,1	139,7
3"	190,5	19,1	127,0	4	5/8"	19,1	152,4
4"	228,6	23,8	157,2	8	5/8"	19,1	190,5
5"	254,0	23,8	185,7	8	3/4"	22,2	215,9
6"	279,4	25,4	215,9	8	3/4"	22,2	241,3
8"	342,9	28,6	269,9	8	3/4"	22,2	298,5
10"	406,4	30,2	323,9	12	7/8"	25,4	362,0
12"	482,6	31,8	381,0	12	7/8"	25,4	431,8
14"	533,4	34,9	412,8	12	1"	28,6	476,3
16"	596,9	36,5	469,9	16	1"	28,6	539,8
18"	635,0	39,7	533,4	16	1 1/8"	31,8	577,9
20"	698,5	42,9	584,2	20	1 1/8"	31,8	635,0
24"	812,8	47,6	692,2	20	1 1/4"	34,9	749,3
* 30"	* 984,3	* 54,0	* 857,3	* 28	* 1 1/4"	* 34,9	* 914,4

Note: * Not included in the standards.

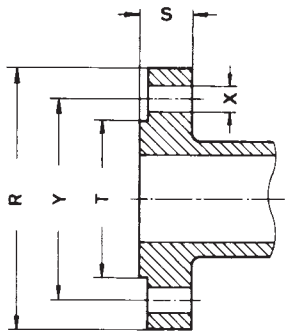

CLASS 250 SEMI STEEL RAISED FACE FLANGES

Valve Size	R Flange Diameter	S Flange Thickness	T 1/16" Raised Face Diameter	U No. of Bolts	V Size of Bolts in	X Size of Holes	Y Bolt Circle Diameter
* 1/2"	* 95,3	* 14,3	* 50,8	* 4	* 1/2"	* 15,9	* 66,7
* 3/4"	* 117,5	* 15,9	* 61,9	* 4	* 5/8"	* 19,1	* 82,6
1"	123,8	17,5	68,0	4	5/8"	19,1	88,9
1 1/4"	133,4	19,1	77,8	4	5/8"	19,1	98,4
1 1/2"	155,6	20,6	90,5	4	3/4"	22,2	114,3
2"	165,1	22,2	106,4	8	5/8"	19,1	127,0
2 1/2"	190,5	25,4	125,4	8	3/4"	22,2	149,2
3"	209,6	28,6	144,5	8	3/4"	22,2	168,3
4"	254,0	31,8	176,2	8	3/4"	22,2	200,0
5"	279,4	34,9	211,1	8	3/4"	22,2	235,0
6"	317,5	36,5	246,1	12	3/4"	22,2	269,9
8"	381,0	41,5	303,2	12	7/8"	25,4	330,2
10"	444,5	47,6	357,2	16	1"	28,6	387,4
12"	520,7	50,8	417,5	16	1 1/8"	31,8	450,9
14"	584,2	54,0	481,0	20	1 1/8"	31,8	514,4
16"	647,7	57,2	535,0	20	1 1/4"	34,9	571,5
18"	711,2	60,3	592,1	24	1 1/4"	34,9	628,7
20"	774,7	63,5	649,3	24	1 1/4"	34,9	685,8
24"	914,4	69,9	768,4	24	1 1/2"	41,3	812,8
30"	1092,2	76,2	944,6	28	1 3/4"	50,8	997,0

CLASS 300 CAST STEEL RAISED FACE FLANGES

Valve Size	R Flange Diameter	S Flange Thickness	T 1/16" Raised Face Diameter	U No. of Bolts	V Size of Bolts in	X Size of Holes	Y Bolt Circle Diameter
1/2"	95,3	14,3	34,9	4	1/2"	15,9	66,7
3/4"	117,5	15,9	42,9	4	5/8"	19,1	82,6
1"	123,8	17,5	50,8	4	5/8"	19,1	88,9
1 1/4"	133,4	19,1	63,5	4	5/8"	19,1	98,4
1 1/2"	155,6	20,6	73,0	4	3/4"	22,2	114,3
2"	165,1	22,2	92,1	8	5/8"	19,1	127,0
2 1/2"	190,5	25,4	104,8	8	3/4"	22,2	149,2
3"	209,6	28,6	127,0	8	3/4"	22,2	168,3
4"	254,0	31,8	157,2	8	3/4"	22,2	200,0
5"	279,4	34,9	185,7	8	3/4"	22,2	235,0
6"	317,5	36,5	215,9	12	3/4"	22,2	269,9
8"	381,0	41,3	269,9	12	7/8"	25,4	330,2
10"	444,5	47,6	323,9	16	1"	28,6	387,4
12"	520,7	50,8	381,0	16	1 1/8"	31,8	450,9
14"	584,2	54,0	412,8	20	1 1/8"	31,8	514,4
16"	647,7	57,2	469,9	20	1 1/4"	34,9	571,5
18"	711,2	60,3	533,4	24	1 1/4"	34,9	628,7
20"	774,7	63,5	584,2	24	1 1/4"	34,9	685,8
24"	914,4	69,9	692,2	24	1 1/2"	41,3	812,8
* 30"	* 1092,2	* 76,2	* 857,3	* 28	* 1 3/4"	* 50,8	* 997,0

Note: * Not included in the standards.

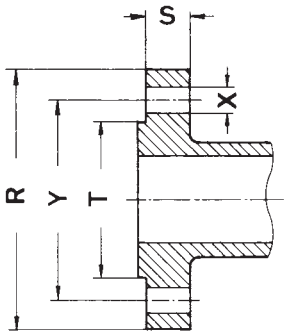

CLASS 400 CAST STEEL RAISED FACE FLANGES

Valve Size	R Flange Diameter	S Flange Thickness	T 1/4" Raised Face Diameter	U No. of Bolts	V Size of Bolts in	X Size of Holes	Y Bolt Circle Diameter
1/2"	95,3	14,3	34,9	4	1/2"	15,9	66,7
3/4"	117,5	15,9	42,9	4	5/8"	19,1	82,6
1"	123,8	17,5	50,8	4	5/8"	19,1	88,9
1 1/4"	133,4	20,6	63,5	4	5/8"	19,1	98,4
1 1/2"	155,6	22,2	73,0	4	3/4"	22,2	114,3
2"	165,1	25,4	92,1	8	5/8"	19,1	127,0
2 1/2"	190,5	28,6	104,8	8	3/4"	22,2	149,2
3"	209,5	31,8	127,0	8	3/4"	22,2	168,3
4"	254,0	34,9	157,2	8	7/8"	25,4	200,0
5"	279,4	38,1	185,7	8	7/8"	25,4	235,0
6"	317,5	41,3	215,9	12	7/8"	25,4	269,9
8"	381,0	47,6	269,9	12	1"	28,6	330,2
10"	444,5	54,0	323,9	16	1 1/8"	31,8	387,4
12"	520,7	57,2	381,0	16	1 1/4"	34,9	450,9
14"	584,2	60,3	412,8	20	1 1/4"	34,9	514,4
16"	647,7	63,5	469,9	20	1 3/8"	38,1	571,5
18"	711,2	66,7	533,4	24	1 3/8"	38,1	628,7
20"	774,7	69,9	584,2	24	1 1/2"	41,3	685,8
24"	914,4	76,2	692,2	24	1 3/4"	47,6	812,8

CLASS 600 CAST STEEL RAISED FACE FLANGES

Valve Size	R Flange Diameter	S Flange Thickness	T 1/4" Raised Face Diameter	U No. of Bolts	V Size of Bolts in	X Size of Holes	Y Bolt Circle Diameter
1/2"	95,3	14,3	34,9	4	1/2"	15,9	66,7
3/4"	117,5	15,9	42,9	4	5/8"	19,1	82,6
1"	123,8	17,5	50,8	4	5/8"	19,1	88,9
1 1/4"	133,4	20,6	63,5	4	5/8"	19,1	98,4
1 1/2"	155,6	22,2	73,0	4	3/4"	22,2	114,3
2"	165,1	25,4	92,1	8	5/8"	19,1	127,0
2 1/2"	190,5	28,6	104,8	8	3/4"	22,2	149,2
3"	209,5	31,8	127,0	8	3/4"	22,2	168,3
4"	273,1	38,1	157,2	8	7/8"	25,4	215,9
5"	330,2	44,5	185,7	8	1"	28,6	266,7
6"	355,6	47,6	215,9	12	1"	28,6	292,1
8"	419,1	55,6	269,9	12	1 1/8"	31,8	349,3
10"	508,0	63,5	323,9	16	1 1/4"	34,9	431,8
12"	558,8	66,7	381,0	20	1 1/4"	34,9	489,0
14"	603,3	69,9	412,8	20	1 3/8"	38,1	527,1
16"	685,8	76,2	469,9	20	1 1/2"	41,3	603,3
18"	743,0	82,6	533,4	20	1 5/8"	44,5	654,1
20"	812,8	88,9	584,2	24	1 5/8"	44,5	723,9
24"	939,8	101,6	692,2	24	1 7/8"	50,8	838,2

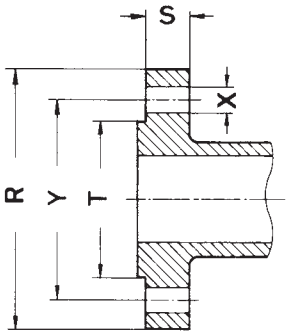

CLASS 900 CAST STEEL RAISED FACE FLANGES

Valve Size	R Flange Diameter	S Flange Thickness	T 1/4" Raised Face Diameter	U No. of Bolts	V Size of Bolts in	X Size of Holes	Y Bolt Circle Diameter
1/2"	120,7	22,2	34,9	4	3/4"	22,2	82,6
3/4"	130,2	25,4	42,9	4	3/4"	22,2	88,9
1"	149,2	28,6	50,8	4	7/8"	25,4	101,6
1 1/4"	158,8	28,6	63,5	4	7/8"	25,4	111,1
1 1/2"	177,8	31,8	73,0	4	1"	28,6	123,8
2"	215,9	38,1	92,1	8	7/8"	25,4	165,1
2 1/2"	244,5	41,3	104,8	8	1"	28,6	190,5
3"	241,3	38,1	127,0	8	7/8"	25,4	190,5
4"	292,1	44,5	157,2	8	1 1/8"	31,8	235,0
5"	349,3	50,8	185,7	8	1 1/4"	34,9	279,4
6"	381,0	55,6	215,9	12	1 1/8"	31,8	317,5
8"	469,9	63,5	269,9	12	1 3/8"	38,1	393,7
10"	546,1	69,9	323,9	16	1 3/8"	38,1	469,9
12"	609,6	79,4	381,0	20	1 3/8"	38,1	533,4
14"	641,4	85,7	412,8	20	1 1/2"	41,3	558,8
16"	704,9	88,9	469,9	20	1 5/8"	44,5	616,0
18"	787,4	101,6	533,4	20	1 7/8"	50,8	685,8
20"	857,3	108,0	584,2	20	2"	54,0	749,3
24"	1041,4	139,7	692,2	20	2 1/2"	66,7	901,7

CLASS 1500 CAST STEEL RAISED FACE FLANGES

Valve Size	R Flange Diameter	S Flange Thickness	T 1/4" Raised Face Diameter	U No. of Bolts	V Size of Bolts in	X Size of Holes	Y Bolt Circle Diameter
1/2"	120,7	22,2	34,9	4	3/4"	22,2	82,6
3/4"	130,2	25,4	42,9	4	3/4"	22,2	88,9
1"	149,2	28,6	50,8	4	7/8"	25,4	101,6
1 1/4"	158,8	28,6	63,5	4	7/8"	25,4	111,1
1 1/2"	177,8	31,8	73,0	4	1"	28,6	123,8
2"	215,9	38,1	92,1	8	7/8"	25,4	165,1
2 1/2"	244,5	41,3	104,8	8	1"	28,6	190,5
3"	266,7	47,6	127,0	8	1 1/8"	31,8	203,2
4"	311,2	54,0	157,2	8	1 1/4"	34,9	241,3
5"	374,7	73,0	185,7	8	1 1/2"	41,3	292,1
6"	393,7	82,6	215,9	12	1 3/8"	38,1	317,5
8"	482,6	92,1	269,9	12	1 5/8"	44,5	393,7
10"	584,2	108,0	323,9	12	1 7/8"	50,8	482,6
12"	673,1	123,8	381,0	16	2"	54,0	571,5
14"	749,3	133,4	412,8	16	2 1/4"	60,3	635,0
16"	825,5	146,1	469,9	16	2 1/2"	66,7	704,9
18"	914,4	161,9	533,4	16	2 3/4"	73,0	774,7
20"	984,3	177,8	584,2	16	3"	79,4	831,9
24"	1168,4	203,2	692,2	16	3 1/2"	92,1	990,6

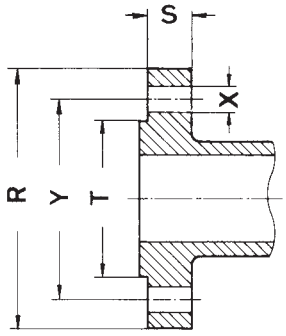

CLASS 2500 CAST STEEL RAISED FACE FLANGES

Valve Size	R Flange Diameter	S Flange Thickness	T 1/4" Raised Face Diameter	U No. of Bolts	V Size of Bolts in	X Size of Holes	Y Bolt Circle Diameter
1/2"	133,4	30,2	34,9	4	3/4"	22,2	88,9
3/4"	139,7	31,8	42,9	4	3/4"	22,2	95,3
1"	158,8	34,9	50,8	4	7/8"	25,4	108,0
1 1/4"	184,2	38,1	63,5	4	1"	28,6	130,2
1 1/2"	203,2	44,5	73,0	4	1 1/8"	31,8	146,1
2"	235,0	50,8	92,1	8	1"	28,6	171,5
2 1/2"	266,7	57,2	104,8	8	1 1/8"	31,8	196,9
3"	304,8	66,7	127,0	8	1 1/4"	34,9	228,6
4"	355,6	76,2	157,2	8	1 1/2"	41,3	273,1
5"	419,1	92,1	185,7	8	1 3/4"	47,6	323,9
6"	482,6	108,0	215,9	8	2"	54,0	368,3
8"	552,5	127,0	269,9	12	2"	54,0	438,2
10"	673,1	165,1	323,9	12	2 1/2"	66,7	539,8
12"	762,0	184,2	381,0	12	2 3/4"	73,0	619,1

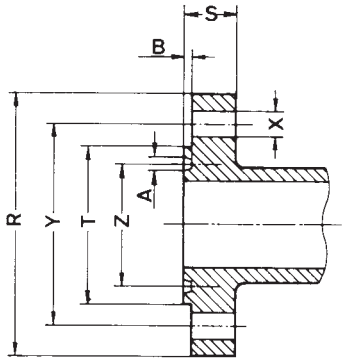

CLASS 150 CAST STEEL RING JOINT FLANGES

Valve Size	R Flange Diameter	S Flange Thickness	T Raised Face Diameter	U No. of Bolts	V Size of Bolts in	X Size of Holes
1"	108,0	15,9	63,5	4	1/2"	15,9
1 1/4"	117,5	17,5	73,0	4	1/2"	15,9
1 1/2"	127,0	19,1	82,6	4	1/2"	15,9
2"	152,4	20,6	101,6	4	5/8"	19,1
2 1/2"	177,8	22,2	120,7	4	5/8"	19,1
3"	190,5	23,8	133,4	4	5/8"	19,1
4"	228,6	28,6	171,5	8	5/8"	19,1
5"	254,0	28,6	193,7	8	3/4"	22,2
6"	279,4	30,1	219,1	8	3/4"	22,2
8"	342,9	33,3	273,1	8	3/4"	22,2
10"	406,4	35,0	330,2	12	7/8"	25,4
12"	482,6	36,5	406,4	12	7/8"	25,4
14"	533,4	40,0	425,5	12	1"	28,6
16"	596,9	41,3	482,6	16	1"	28,6
18"	635,0	44,5	546,1	16	1 1/8"	31,8
20"	698,5	47,6	596,9	20	1 1/8"	31,8
24"	812,8	52,5	711,2	20	1 1/4"	34,9

Valve Size	Y Bolt Circle Diameter	Z Pitch Diameter	A Width	B Depth	C Groove Number
1"	79,4	47,6	8,7	6,4	R 15
1 1/4"	88,9	57,2	8,7	6,4	R 17
1 1/2"	98,4	65,1	8,7	6,4	R 19
2"	120,7	82,6	8,7	6,4	R 22
2 1/2"	139,7	101,6	8,7	6,4	R 25
3"	152,4	114,3	8,7	6,4	R 29
4"	190,5	149,2	8,7	6,4	R 36
5"	215,9	171,5	8,7	6,4	R 40
6"	241,3	193,7	8,7	6,4	R 43
8"	298,5	247,7	8,7	6,4	R 48
10"	362,0	304,8	8,7	6,4	R 52
12"	431,8	381,0	8,7	6,4	R 56
14"	476,3	396,9	8,7	6,4	R 59
16"	539,8	454,0	8,7	6,4	R 64
18"	577,9	517,5	8,7	6,4	R 68
20"	635,0	558,8	8,7	6,4	R 72
24"	749,3	673,1	8,7	6,4	R 76

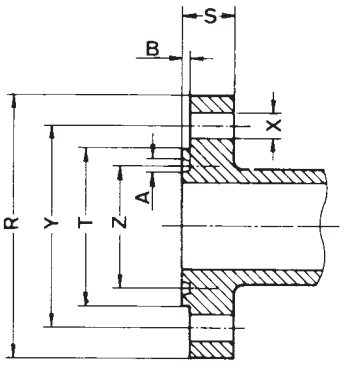

CLASS 300 CAST STEEL RING JOINT FLANGES

Valve Size	R Flange Diameter	S Flange Thickness	T Raised Face Diameter	U No. of Bolts	V Size of Bolts in	X Size of Holes
1/2"	95,3	18,3	50,8	4	1/2"	15,9
3/4"	117,5	20,6	63,5	4	5/8"	19,1
1"	123,8	22,2	69,9	4	5/8"	19,1
1 1/4"	133,4	23,8	79,4	4	5/8"	19,1
1 1/2"	155,6	25,4	90,5	4	3/4"	22,2
2"	165,1	28,6	108,0	8	5/8"	19,1
2 1/2"	190,5	31,8	127,0	8	3/4"	22,2
3"	209,6	34,9	146,1	8	3/4"	22,2
4"	254,0	38,1	174,6	8	3/4"	22,2
5"	279,4	41,3	209,6	8	3/4"	22,2
6"	317,5	42,9	241,3	12	3/4"	22,2
8"	381,0	47,4	301,6	12	7/8"	25,4
10"	444,5	54,0	355,6	16	1"	28,6
12"	520,7	57,2	412,8	16	1 1/8"	31,8
14"	584,2	60,1	457,2	20	1 1/8"	31,8
16"	647,7	63,5	508,0	20	1 1/4"	34,9
18"	711,2	66,7	574,7	24	1 1/4"	34,9
20"	774,7	71,5	635,0	24	1 1/4"	34,9
24"	914,4	79,4	749,3	24	1 1/2"	41,3

Valve Size	Y Bolt Circle Diameter	Z Pitch Diameter	A Width	B Depth	C Groove Number
1/2"	66,7	34,1	7,1	5,6	R 11
3/4"	82,6	42,9	8,7	6,4	R 13
1"	88,9	50,8	8,7	6,4	R 16
1 1/4"	98,4	60,3	8,7	6,4	R 18
1 1/2"	114,3	68,3	8,7	6,4	R 20
2"	127,0	82,6	11,9	7,9	R 23
2 1/2"	149,2	101,6	11,9	7,9	R 26
3"	168,3	123,8	11,9	7,9	R 31
4"	200,0	149,2	11,9	7,9	R 37
5"	235,0	181,0	11,9	7,9	R 41
6"	269,9	211,1	11,9	7,9	R 45
8"	330,2	269,9	11,9	7,9	R 49
10"	387,4	323,9	11,9	7,9	R 53
12"	450,9	381,0	11,9	7,9	R 57
14"	514,4	419,1	11,9	7,9	R 61
16"	571,5	469,9	11,9	7,9	R 65
18"	628,7	533,4	11,9	7,9	R 69
20"	685,8	584,2	13,5	9,5	R 73
24"	812,8	692,2	16,7	11,1	R 77

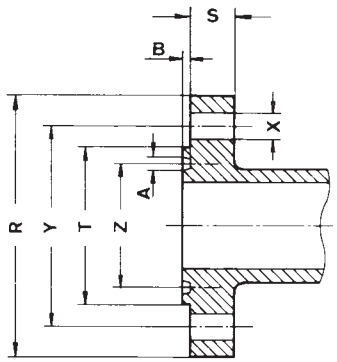

CLASS 400 CAST STEEL RING JOINT FLANGES

Valve Size	R Flange Diameter	S Flange Thickness	T Raised Face Diameter	U No. of Bolts	V Size of Bolts in	X Size of Holes
1/2"	95,3	14,3	50,8	4	1/2"	15,9
3/4"	117,5	15,9	63,5	4	5/8"	19,1
1"	123,8	17,5	69,9	4	5/8"	19,1
1 1/4"	133,4	20,6	79,4	4	5/8"	19,1
1 1/2"	155,6	22,2	90,5	4	3/4"	22,2
2"	165,1	25,4	108,0	8	5/8"	19,1
2 1/2"	190,5	28,6	127,0	8	3/4"	22,2
3"	209,5	31,8	146,1	8	3/4"	22,2
4"	254,0	34,9	174,6	8	7/8"	25,4
5"	279,4	38,1	209,6	8	7/8"	25,4
6"	317,5	41,3	241,3	12	7/8"	25,4
8"	381,0	47,6	301,6	12	1"	28,6
10"	444,5	54,0	355,6	16	1 1/8"	31,8
12"	520,7	57,2	412,8	16	1 1/4"	34,9
14"	584,2	60,3	457,2	20	1 1/4"	34,9
16"	647,7	63,5	508,0	20	1 3/8"	38,1
18"	711,2	66,7	574,7	24	1 3/8"	38,1
20"	774,7	69,9	635,0	24	1 1/2"	41,3
24"	914,4	76,2	749,3	24	1 3/4"	47,6

Valve Size	Y Bolt Circle Diameter	Z Pitch Diameter	A Width	B Depth	C Groove Number
1/2"	66,7	34,1	7,1	5,6	R 11
3/4"	82,6	42,9	8,7	6,4	R 13
1"	88,9	50,8	8,7	6,4	R 16
1 1/4"	98,4	60,3	8,7	6,4	R 18
1 1/2"	114,3	68,3	8,7	6,4	R 20
2"	127,0	82,6	11,9	7,9	R 23
2 1/2"	149,2	101,6	11,9	7,9	R 26
3"	168,3	123,8	11,9	7,9	R 31
4"	200,0	149,2	11,9	7,9	R 37
5"	235,0	181,0	11,9	7,9	R 41
6"	269,9	211,1	11,9	7,9	R 45
8"	330,2	269,9	11,9	7,9	R 49
10"	387,4	323,9	11,9	7,9	R 53
12"	450,9	381,0	11,9	7,9	R 57
14"	514,4	419,1	11,9	7,9	R 61
16"	571,5	469,9	11,9	7,9	R 65
18"	628,7	533,4	11,9	7,9	R 69
20"	685,8	584,2	13,5	9,5	R 73
24"	812,8	692,2	16,7	11,1	R 77

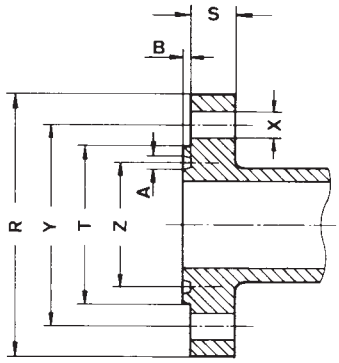

CLASS 600 CAST STEEL RING JOINT FLANGES

Valve Size	R Flange Diameter	S Flange Thickness	T Raised Face Diameter	U No. of Bolts	V Size of Bolts in	X Size of Holes
1/2"	95,3	14,3	50,8	4	1/2"	15,9
3/4"	117,5	15,9	63,5	4	5/8"	19,1
1"	123,8	17,5	69,9	4	5/8"	19,1
1 1/4"	133,4	20,6	79,4	4	5/8"	19,1
1 1/2"	155,6	22,2	90,5	4	3/4"	22,2
2"	165,1	25,4	108,0	8	5/8"	19,1
2 1/2"	190,5	28,6	127,0	8	3/4"	22,2
3"	209,5	31,8	146,1	8	3/4"	22,2
4"	273,1	38,1	174,6	8	7/8"	25,4
5"	330,2	44,5	209,6	8	1"	28,6
6"	355,6	47,6	241,3	12	1"	28,6
8"	419,1	55,6	301,6	12	1 1/8"	31,8
10"	508,0	63,5	355,6	16	1 1/4"	34,9
12"	558,8	66,7	412,8	20	1 1/4"	34,9
14"	603,3	69,9	457,2	20	1 3/8"	38,1
16"	685,8	76,2	508,0	20	1 1/2"	41,3
18"	743,0	82,6	574,7	20	1 5/8"	44,5
20"	812,8	88,9	635,0	24	1 5/8"	44,5
24"	939,8	101,6	749,3	24	1 7/8"	50,8

Valve Size	Y Bolt Circle Diameter	Z Pitch Diameter	A Width	B Depth	C Groove Number
1/2"	66,7	34,1	7,1	5,6	R11
3/4"	82,6	42,9	8,7	6,4	R13
1"	88,9	50,8	8,7	6,4	R16
1 1/4"	98,4	60,3	8,7	6,4	R18
1 1/2"	114,3	68,3	8,7	6,4	R20
2"	127,0	82,6	11,9	7,9	R23
2 1/2"	149,2	101,6	11,9	7,9	R26
3"	168,3	123,8	11,9	7,9	R31
4"	215,9	149,2	11,9	7,9	R37
5"	266,7	181,0	11,9	7,9	R41
6"	292,1	211,1	11,9	7,9	R45
8"	349,3	269,9	11,9	7,9	R49
10"	431,8	323,9	11,9	7,9	R53
12"	489,0	381,0	11,9	7,9	R57
14"	527,1	419,1	11,9	7,9	R61
16"	603,3	469,9	11,9	7,9	R65
18"	654,1	533,4	11,9	7,9	R69
20"	723,9	584,2	13,5	9,5	R73
24"	838,2	692,2	16,7	11,1	R77

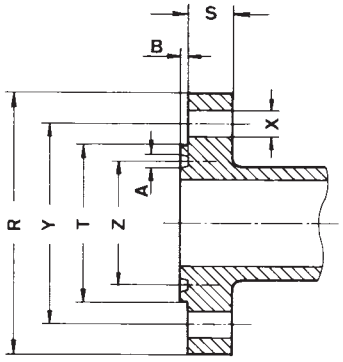

CLASS 900 CAST STEEL RING JOINT FLANGES

Valve Size	R Flange Diameter	S Flange Thickness	T Raised Face Diameter	U No. of Bolts	V Size of Bolts in	X Size of Holes
1/2"	120,7	22,2	60,3	4	3/4"	22,2
3/4"	130,2	25,4	66,7	4	3/4"	22,2
1"	149,2	28,6	71,4	4	7/8"	25,4
1 1/4"	158,8	28,6	81,0	4	7/8"	25,4
1 1/2"	177,8	31,6	92,1	4	1"	28,6
2"	215,9	38,1	123,8	8	7/8"	25,4
2 1/2"	244,5	41,3	136,5	8	1"	28,6
3"	241,0	38,1	155,6	8	7/8"	25,4
4"	292,1	44,5	181,0	8	1 1/8"	31,8
5"	349,3	50,8	215,9	8	1 1/4"	34,9
6"	381,0	55,6	241,3	12	1 1/8"	31,8
8"	469,9	63,5	308,0	12	1 3/8"	38,1
10"	546,1	69,9	362,0	16	1 3/8"	38,1
12"	609,6	79,4	419,1	20	1 3/8"	38,1
14"	641,4	85,7	466,7	20	1 1/2"	41,3
16"	704,9	88,9	523,9	20	1 5/8"	44,5
18"	787,4	101,6	593,7	20	1 7/8"	50,8
20"	857,3	108,0	647,7	20	2"	54,0
24"	1041,4	139,7	771,5	20	2 1/2"	66,7

Valve Size	Y Bolt Circle Diameter	Z Pitch Diameter	A Width	B Depth	C Groove Number
1/2"	82,6	39,7	8,7	6,4	R12
3/4"	88,9	44,5	8,7	6,4	R14
1"	101,6	50,8	8,7	6,4	R16
1 1/4"	111,1	60,3	8,7	6,4	R18
1 1/2"	123,8	68,3	8,7	6,4	R20
2"	165,1	95,3	11,9	7,9	R24
2 1/2"	190,5	108,0	11,9	7,9	R27
3"	190,5	123,8	11,9	7,9	R31
4"	235,0	149,2	11,9	7,9	R37
5"	279,4	181,0	11,9	7,9	R41
6"	317,5	211,1	11,9	7,9	R45
8"	393,7	269,9	11,9	7,9	R49
10"	469,9	323,9	11,9	7,9	R53
12"	533,4	381,0	11,9	7,9	R57
14"	558,8	419,1	16,7	11,1	R62
16"	616,0	469,9	16,7	11,1	R66
18"	685,8	533,4	19,8	12,7	R70
20"	749,3	584,2	19,8	12,7	R74
24"	901,7	692,2	27,0	15,9	R78

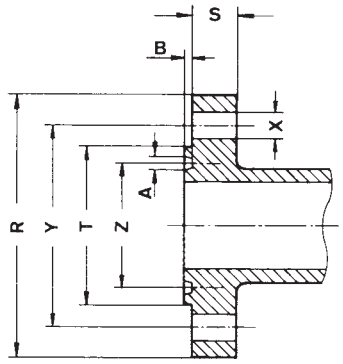

CLASS 1500 CAST STEEL RING JOINT FLANGES

Valve Size	R Flange Diameter	S Flange Thickness	T Raised Face Diameter	U No. of Bolts	V Size of Bolts in	X Size of Holes
1/2"	120,7	22,2	60,3	4	3/4"	22,2
3/4"	130,2	25,4	66,7	4	3/4"	22,2
1"	149,2	28,6	71,4	4	7/8"	25,4
1 1/4"	158,8	28,6	81,0	4	7/8"	25,4
1 1/2"	177,8	31,6	92,1	4	1"	28,6
2"	215,9	38,1	123,8	8	7/8"	25,4
2 1/2"	244,5	41,3	136,5	8	1"	28,6
3"	266,7	47,6	168,3	8	1 1/8"	31,8
4"	311,2	54,0	193,7	8	1 1/4"	34,9
5"	374,7	73,0	228,6	8	1 1/2"	41,3
6"	393,7	82,6	247,7	12	1 3/8"	38,1
8"	482,6	92,1	317,5	12	1 5/8"	44,5
10"	584,2	108,0	371,5	12	1 7/8"	50,8
12"	673,1	123,8	438,2	16	2"	54,0
14"	749,3	133,4	489,0	16	2 1/4"	60,3
16"	825,5	146,1	546,1	16	2 1/2"	66,7
18"	914,4	161,9	612,8	16	2 3/4"	73,0
20"	984,3	177,8	673,1	16	3"	79,4
24"	1168,4	203,2	793,8	16	3 1/2"	92,1

Valve Size	Y Bolt Circle Diameter	Z Pitch Diameter	A Width	B Depth	C Groove Number
1/2"	82,6	39,7	8,7	6,4	R12
3/4"	88,9	44,5	8,7	6,4	R14
1"	101,6	50,8	8,7	6,4	R16
1 1/4"	111,1	60,3	8,7	6,4	R18
1 1/2"	123,8	68,3	8,7	6,4	R20
2"	165,1	95,3	11,9	7,9	R24
2 1/2"	190,5	108,0	11,9	7,9	R27
3"	203,2	136,5	11,9	7,9	R35
4"	241,3	161,9	11,9	7,9	R39
5"	292,1	193,7	11,9	7,9	R44
6"	317,5	211,1	13,5	9,5	R46
8"	393,7	269,9	16,7	11,1	R50
10"	482,6	323,9	16,7	11,1	R54
12"	571,5	381,0	23,0	14,3	R58
14"	635,0	419,1	27,0	15,9	R63
16"	704,9	469,9	30,2	17,5	R67
18"	774,7	533,4	30,2	17,5	R71
20"	831,9	584,2	33,3	17,5	R75
24"	990,6	692,2	36,5	20,6	R79

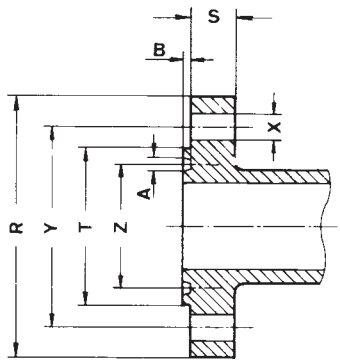

CLASS 2500 CAST STEEL RING JOINT FLANGES

Valve Size	R Flange Diameter	S Flange Thickness	T Raised Face Diameter	U No. of Bolts	V Size of Bolts in	X Size of Holes
1/2"	133,4	30,2	65,1	4	3/4"	22,2
3/4"	139,7	31,8	73,0	4	3/4"	22,2
1"	158,8	34,9	82,6	4	7/8"	25,4
1 1/4"	184,2	38,1	101,6	4	1"	28,6
1 1/2"	203,2	44,5	114,3	4	1 1/8"	31,8
2"	235,0	50,8	133,4	8	1"	28,6
2 1/2"	266,7	57,2	149,2	8	1 1/8"	31,8
3"	304,8	66,7	168,3	8	1 1/4"	34,9
4"	355,6	76,2	203,2	8	1 1/2"	41,3
5"	419,1	92,1	241,3	8	1 3/4"	47,6
6"	482,6	108,0	279,4	8	2"	54,0
8"	552,5	127,0	339,7	12	2"	54,0
10"	673,1	165,1	425,5	12	2 1/2"	66,7
12"	762,0	184,2	495,3	12	2 3/4"	73,0

Valve Size	Y Bolt Circle Diameter	Z Pitch Diameter	A Width	B Depth	C Groove Number
1/2"	88,9	42,9	8,7	6,4	R13
3/4"	95,3	50,8	8,7	6,4	R16
1"	108,0	60,3	8,7	6,4	R18
1 1/4"	130,2	72,2	11,9	7,9	R21
1 1/2"	146,1	82,6	11,9	7,9	R23
2"	171,5	101,6	11,9	7,9	R26
2 1/2"	196,9	111,1	13,5	9,5	R28
3"	228,6	127,0	13,5	9,5	R32
4"	273,1	157,2	16,7	11,1	R38
5"	323,9	190,5	19,8	12,7	R42
6"	368,3	228,6	19,8	12,7	R47
8"	438,2	279,4	23,0	14,3	R51
10"	539,8	342,9	30,2	17,5	R55
12"	619,1	406,4	33,3	17,5	R60

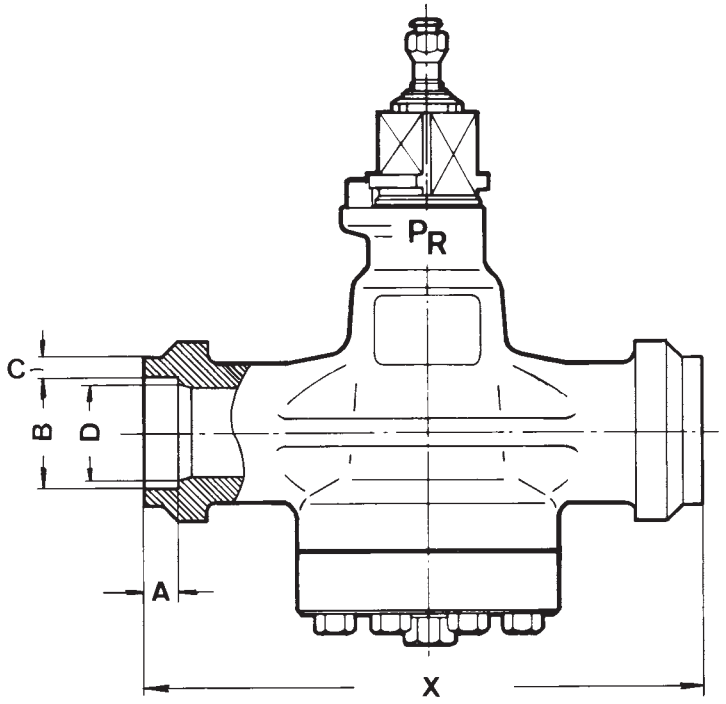

ANSI B16.11

X = ANSI B16.10 Buttwelding End

Valve size	A	B	C			D		
			* Schedul 40	Schedul 80	Schedul 160	* Schedul 40	Schedul 80	Schedul 160
1/2"	9,65	21,84	3,71	4,67	5,97	15,80	15,80	11,79
3/4"	12,70	27,18	3,56	4,90	6,96	20,93	20,93	15,54
1"	12,70	33,91	4,21	5,69	7,92	26,64	26,64	20,70
1 1/4"	12,70	42,67	4,44	6,07	7,92	35,05	35,05	29,46
1 1/2"	12,70	48,77	4,59	6,35	8,92	40,89	40,89	33,99
2"	15,75	61,24	4,90	6,93	10,92	52,50	52,50	42,85
2 1/2"	15,75	74,00	6,45	8,76		62,71	62,71	
3"	15,75	89,98	6,85	9,53		77,93	77,93	
4"	19,05	115,63	7,54	10,69		102,26	102,26	

Tolerances: B = 1/2" - 2" = ±0,1
2 1/2" - 4" = ±0,15

D = 1/2" - 2" = ±0,7
2 1/2" - 4" = ±1,5

* Not included in ANSI B16.11.

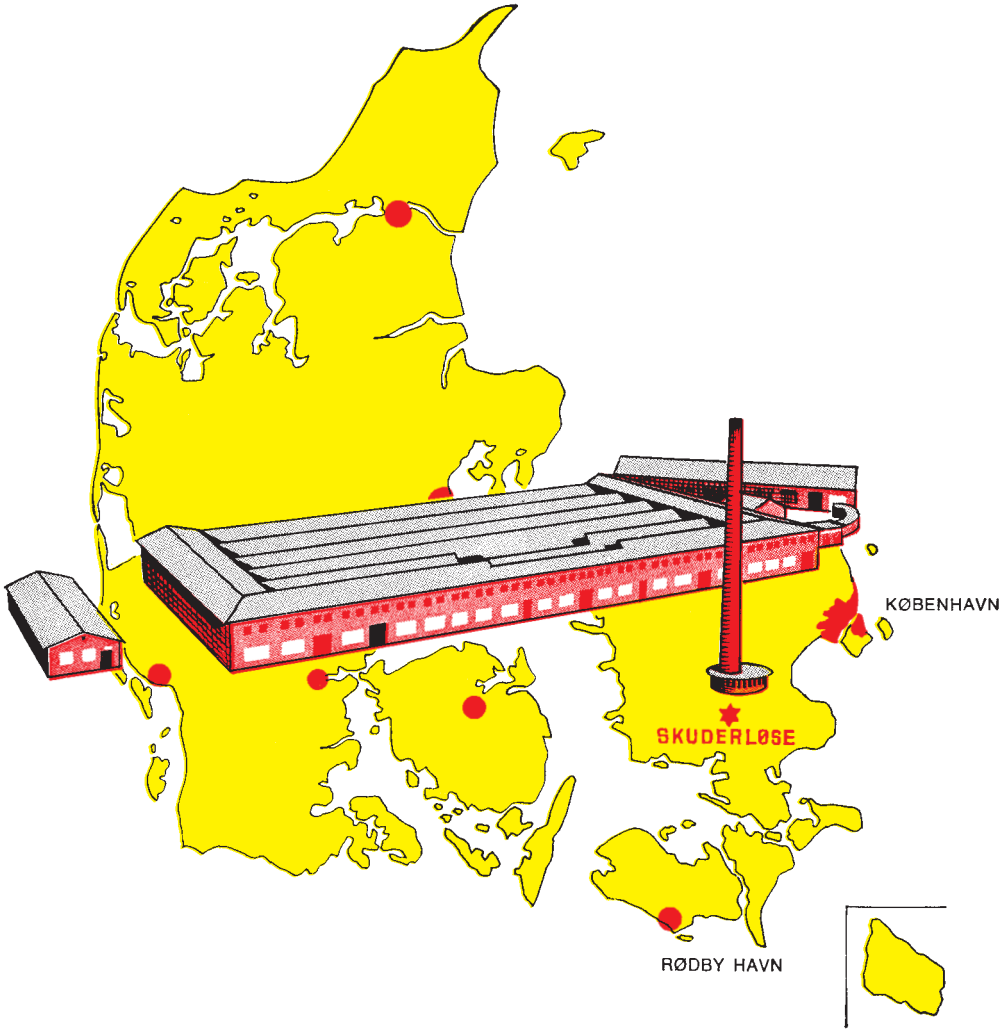

BRDR. CHRISTENSENS HANER A/S

Skuderløse, 4690 Haslev, Denmark
Tlf.: + 45 56 36 36 36 - Fax: +45 56 36 36 00
www.bch.dk - email: bch@bch.dk

KÄHLER GmbH Armaturen
Industriestr. 77b, D-51399 Burscheid
Fon +49 (0)2174/7848-0 Fax -25
info@kaehler-armaturen.de | www.kaehler-armaturen.de